MRS-2 SERVICE NOTES

•SPECIFICATIONS

•KEYBOARD
(37 keys, 3 octaves, F-F)

•VCO (VOLTAGE CONTROLLED OSCILLATOR) (X2)
VCO RANGE (16', 8', 4')
WAVEFORM (／1、⊓⊔、⊓⊔)
PULSE WIDTH (50%, 40%, 20%, 10%)

•VCF (VOLTAGE CONTROLLED FILTER)
HPF CUTOFF (40Hz – 5kHz)
LPF CUTOFF (20Hz – 20kHz)

•ENVELOPE GENERATOR (1 EACH FOR VCF, VCA)
ATTACK TIME (0.6ms – 3sec)
DECAY TIME (14ms – 10sec)
SUSTAIN LEVEL (0 – 100%)
RELEASE TIME (14ms – 10sec)

•LFO (Low Frequency Oscillator)
WAVEFORM (～ ⊓⊔ ⋀ ⋁)
LFO RATE (0.1Hz – more than 80Hz)

•DELAY/BEND SECTION
DELAY TIME (0 – 10sec)

•TUNING
MASTER TUNING (greater than ±1 semitone)
VCO-2 "A" TUNING (greatr than ±1 octave)
VCO-2 "B" TUNING (greater than ±1 octave)

•CONTROLLER SECTION
PORTAMENTO (0 – 3sec)
VCO : greater than +1 octave
VCF : greater than +2 octaves (resonance pitch)
VCA : greater than +6dB, −12dB)

•INPUTS AND OUTPUTS
OUTPUT LEVEL selector (H: 0dBm, M: −6dBm, L: −12dBm)
HEADPHONE jack (stereo; 8Ω)
HEADPHONE LEVEL selector (H, M, L)
BEND CONTROL IN jack, with BEND SENSITIVITY control at "10"
VCO: approx 2v/8va
VCO : approx 2v/8va
VCF : approx 1v/8va
VCA : approx 1v/2.2dB
CV OUT jack (1v/ 8 va)
GATE OUT jack (+10v)
CV IN jack (1v/8va)
GATE IN jack (greater than +10v)

•GENERAL
Power consumption: 20w
Overall size: 765(w)x402(d)x162(h)mm
Weight: 14kg
Accessories: 2.5m connection cord

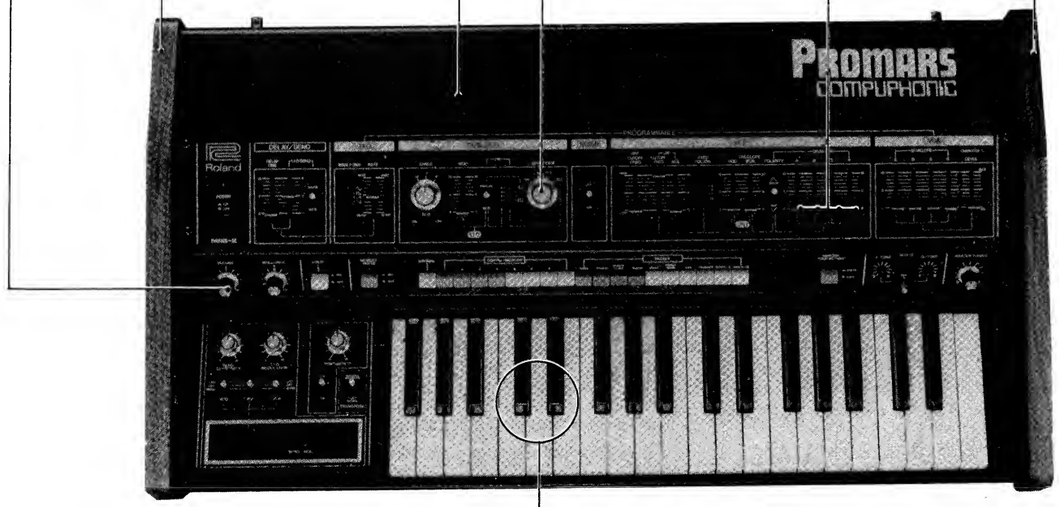

Buttons

No.9	Black	(016-009)	No.86	Red	(016-086)
No.85	White	(016-085)	No.87	Green	(016-087)
No.89	Blue	(016-089)	No.88	Yellow	(016-088)

Power switch

SDG5P-501-1 (001-215) 100V

SDG5P-501-2 (001-216) 117V

SDG5P-502 (001-217) 220/240V

Button No.9 (016-009)

DISASSEMBLY

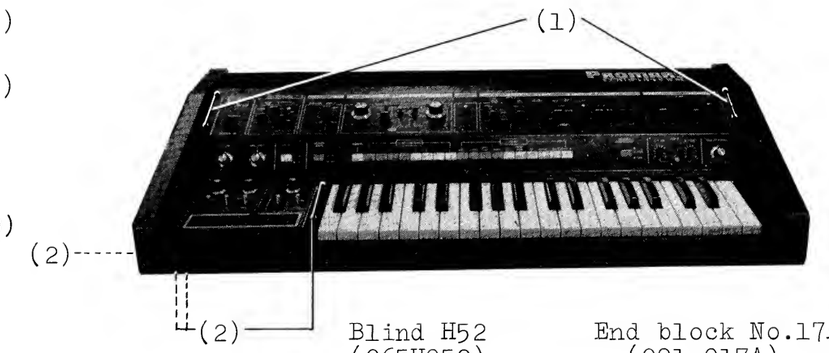

Removal Screws

(1) --- Front Upper panel
(2) --- Bender Control Block
(3) --- Keyboard

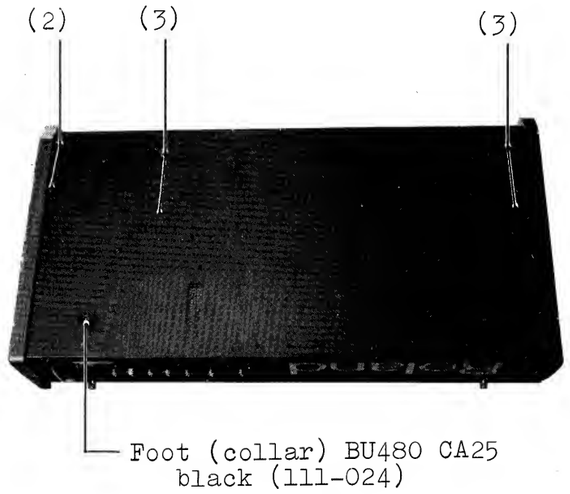

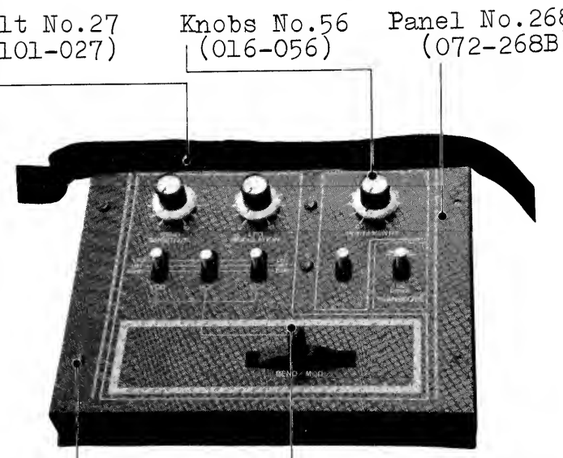

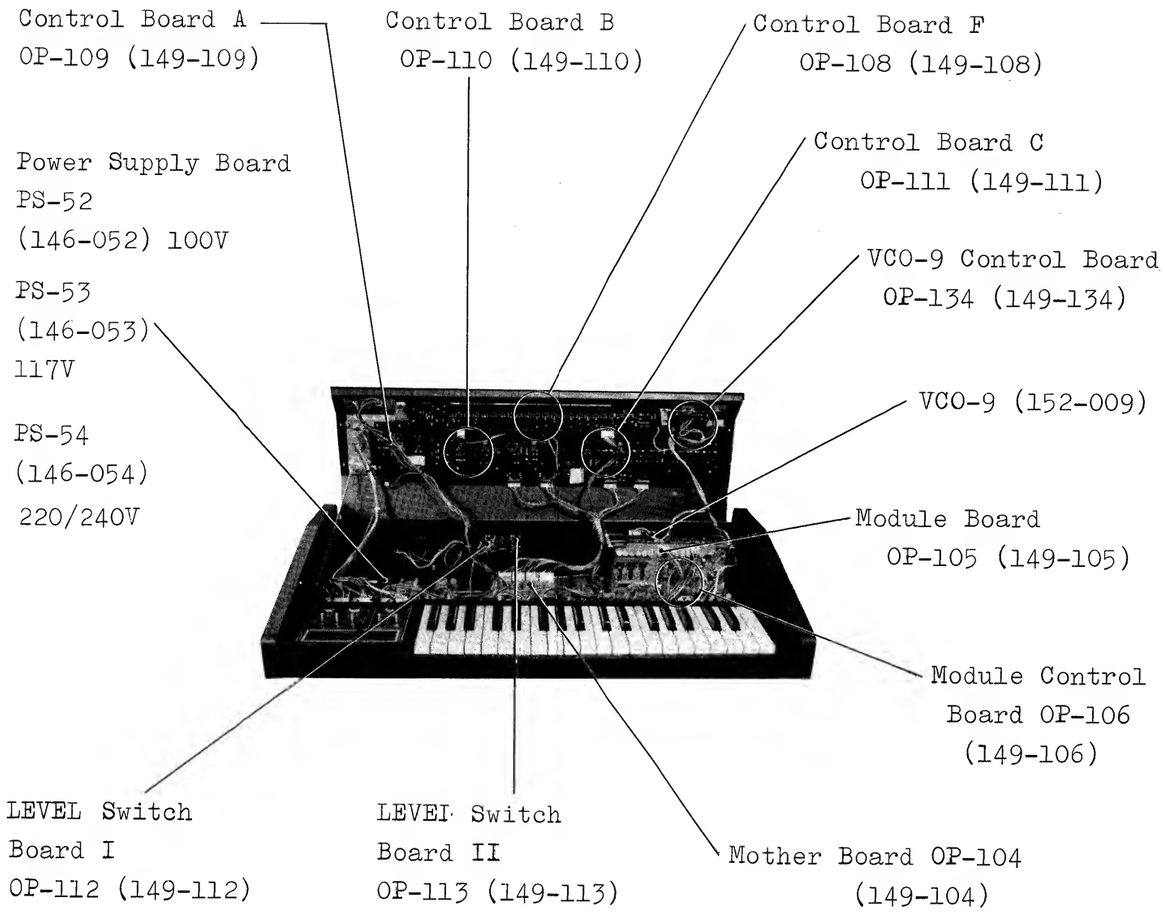

When ordering PCB, suffix an alphabetical letter to the part number refferring to the Parts List and PCB Wiring Layout.

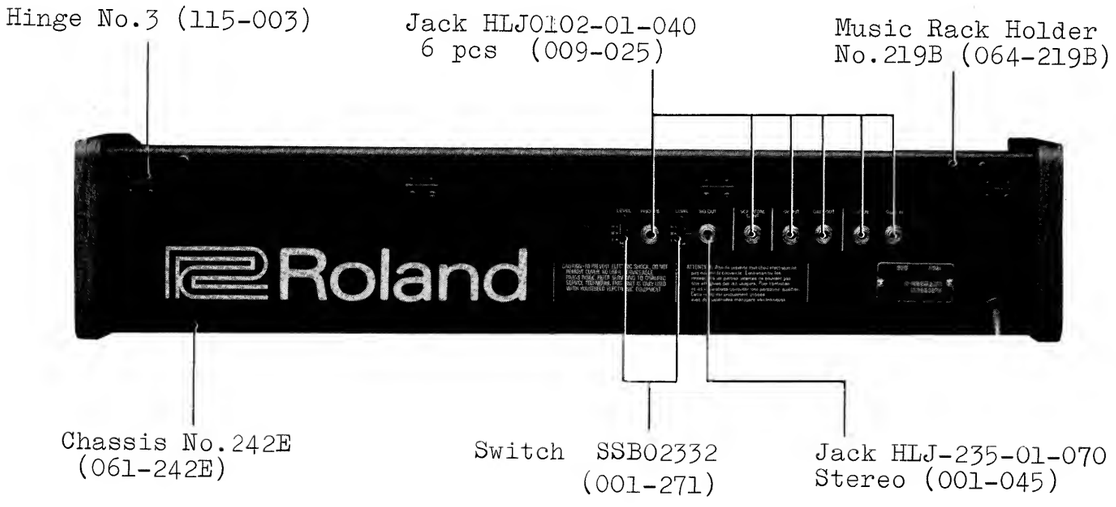

KEYBOARD PARTS

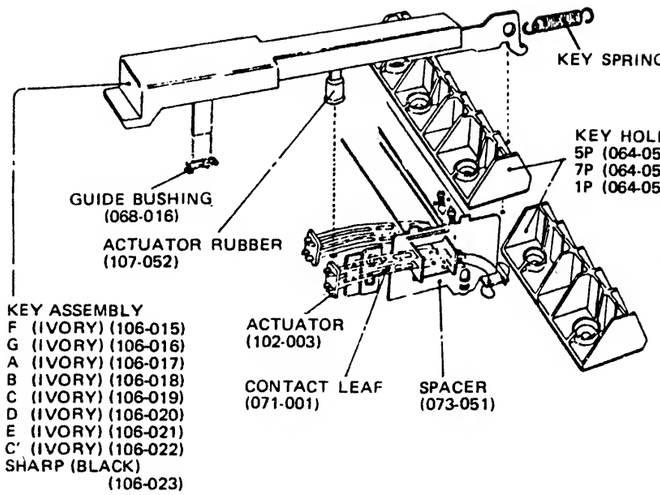

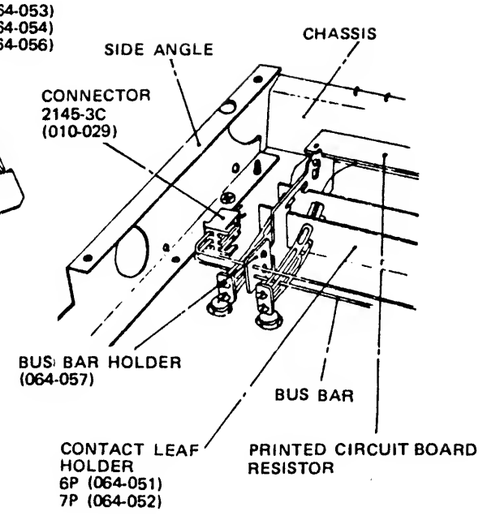

INSTRUMENT MODEL	NO. OF KEYS	KEYBOARD MODEL	KEY SPRING	BUS BAR	PCB		RESISTOR
					6P	7P	
SH-1	32	SK-132-D	070-052	071H034	052-066	052-067	100 1/4W ±1% CRB1/4FX
SH-3A	44	SK-142-A	070-052	071-008	052-066	052-067	100 1/4W ±1% CRB1/4FX
SH-5	44	SK-142-B	070-052	071-008	052-066	052-067	100 1/4W ±1% CRB1/4FX
SH-7	44	SK-142-C	070-052	071-008	052-066	052-067	100 1/4W ±1% CRB1/4FX
SH-2	37	SK132H	070-052	071-006	052-066	052-067	100 $\frac{1}{4}$W ±1% CRB$\frac{1}{4}$FX
SH-1000	37	SK-132-A	070-052	071-006	052-066	052-067	1K 1/4W ±2%
SH-2000	37	SK-132-B	070-052	071-006	052-066	052-067	1K 1/4W ±2% SELECTED
VP-330	49	SK191-B	070-058	071H043	052-081	052-082	
SYSTEM-100	37	SK-132-C	070-052	071-006	052-066	052-067	100 1/4W ±1% CRB1/4FX
SYSTEM-700	61	SK-162-C	070-058	071-007	052-066	052-067	100 1/4W ±1% CRA1/4FX
MRS-2	37	SK132G	070-052	071H006	052-066	052-067	100 $\frac{1}{4}$W±1% CRB$\frac{1}{4}$FX
RS-101	61	SK-161-A	070-058	071-007	052-081	052-082	
RS-202	61	SK-161-A	070-058	071-007	052-081	052-082	
RS-505	49	SK-192-A	070-058	071H043	052-081	052-082	
EP-10	61	SK-162-A	070-058	071-007			
EP-20	61	SK-162-A	070-058	071-007			
EP-30	61	SK-162B	070-058	071-007	052-081	052-082	

CIRCUIT DESCRIPTION

What is Compu-Phonic Synthesizer ?
(Features of Compu-Phonic Synthesizer)

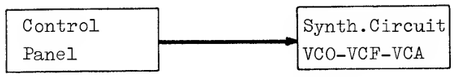

Conventional Synthesizer

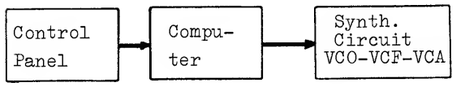

Compu-phonic Synthesizer

1. Operational Principle:

In the conventional synthesizer, the circuits (VCO, VCF, VCA, etc.) are directly controlled from the control panel.
In the compu-phonic synthesizer, it is the computer that comes in between and provides control voltages suitable to those VCO, VCF, VCA, ENV GEN, etc.

2. Hardware:

Compu-Phonic Synthesizer is composed of the "Synthesizer Control Circuits" with μPD8048 as its central point and the "synthesizer circuits" which are fully controlled by voltage.

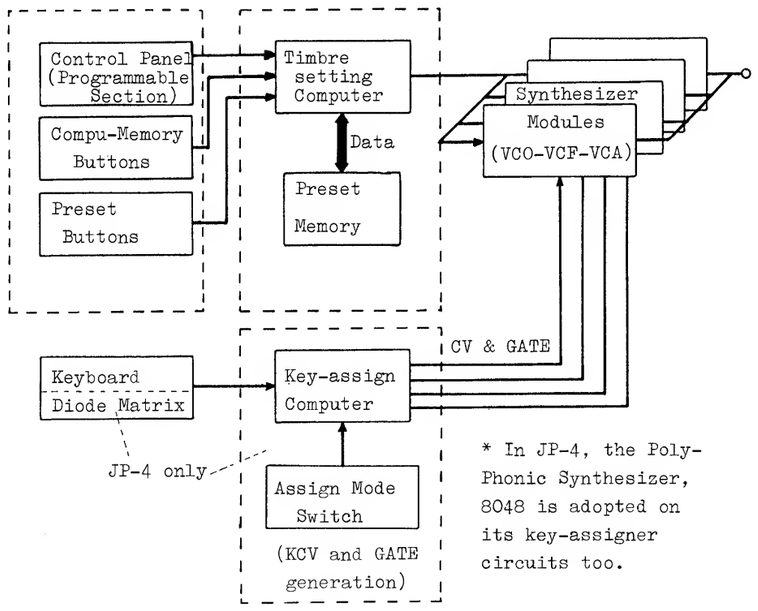

* In JP-4, the Poly-Phonic Synthesizer, 8048 is adopted on its key-assigner circuits too.

2-1. Control Section:
- Switches and Sliders -

Sliders and switches on the control panel are now not for the production of the synthesizer control signals directly, such as the production of the time constants, ON/OFF switching, etc. They now serve only to letting the computer know of their positions or the states as they are put on the Control Panel.

2-2. Voltage Controlled Synthesizer Circuits:

Such parameters as the time constant, ON/OFF switching, or their signal levels, etc. have so far been produced on the control panel there are sliders and switches to obtain directly of such.

These are, however, now produced by the computer's internal circuits, and the synthesizer circuits are under fully voltage controlled, programed and/or given by the computer, with self-contained transconductance amps or analog switches, etc. However, the circuit and function themselves of VCO, VCF, VCA etc. of the synthesizer's main circuits are just as the same as before with those on the conventional synthesizer.

Function of Mother Board

In the Mother Board included are the microcomputer 8048-012 and its perpheral circuits. (refer to the General Block Diagram when reading the following)

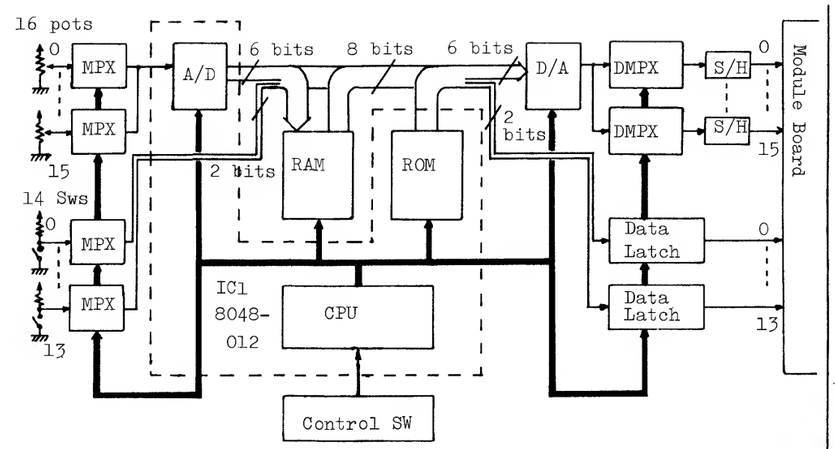

Mother Board Block Diagram

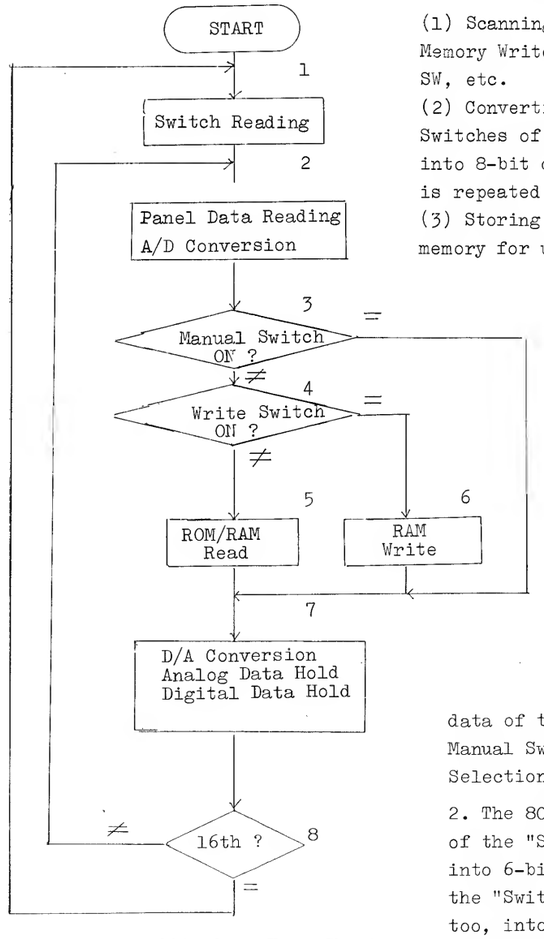

8048-012 Flow Chart
(JP-4, PROMARS)

(1) Scanning of all the switches on the Control Panle such as Memory Write SW, Manual SW, Compu-Memory SW, Pre-Set Selection SW, etc.
(2) Converting the Analog signals obtanined from Sliders and Switches of the Programmable Section on the Control Panel, into 8-bit digital data (A/D conversion). (This data reading is repeated 16 divided times to complete them all).
(3) Storing these A/D converted data of the POTs and SWs into memory for use afterward upon retrieval.

(4) Converting back again these digital data into analog voltage (D/A conversion) to send them out into Synthesizer Modules.
All these functions stated above are performed under the control of 8048-012.

-Functions of 8048-012-
(Tone color setting controller)

These operations of 8048-012 are shown in the flow chart. The 8048-012 repeats such flow chart cycle.
The following numbers refer to those in flow-chart.

1. When the power is turned on, 8048-012 starts its reading and puts into memory the data of the positions it reads of Memory Write Switch, Manual Switch, Compu-Memory Selection Switch and Preset Selection Switch.

2. The 8048-012 takes in at first the voltage data of one of the "Slider pots" on the Control Panel and converts it into 6-bit digital data. At the same time, it reads out the "Switch Position" on the Control Panel and converts it, too, into 2-bit digital data. The two data thus obtained are combined to make a total 8-bit data. These are held there for a while.

3. If the MANUAL Switch was OFF at step 1, the program proceeds to step 4, or if ON, to 7. During this process, the data obtained in step 2 is maintained.

4. When the Memory Write Switch was OFF at step 1, the program goes to step 5, if ON, to to 6. The step 2 data is still maintained.

5. Based on the data being held in step 2, the 8048-012 accesses to either RAM (Random Access Memory) when a switch in Compu-Memory was pushed in, or ROM (Read Only Memory) when one of Preset Switches was in. It then reads out from the address corresponding to the switch depressed, the data to give control to the Synthesizer Modules.

6. Based on the data in step 1, it writes the data held in step 2 to RAM, selecting the address over there which is corresponding to the switch position on the COMPU-MEMORY SWs.

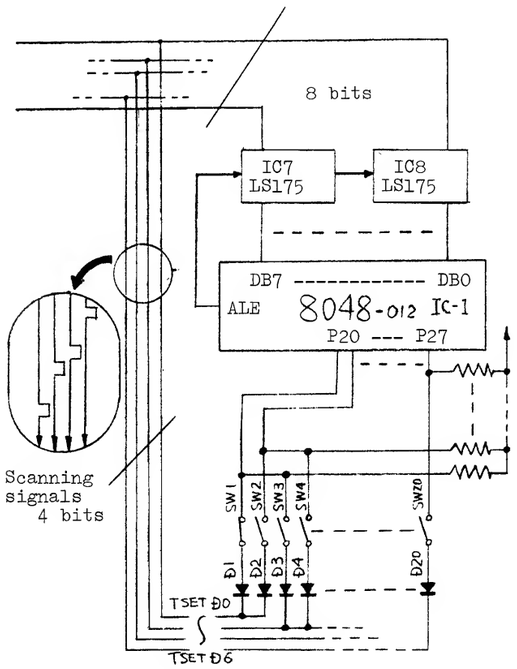

Switch Scanning Signal Flows

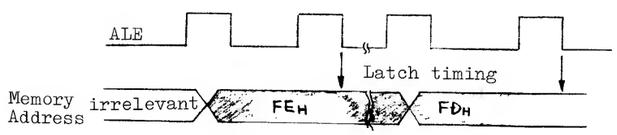

DB Data Latch Timing

7. The 8048 divides the 8-bit data (data in step 2 or data retrieved in step 5) into two formats: 2-bit switch data and 6-bit slider data. The 6-bit data then proceeds to D/A conversion. Those two signals of analog converted voltage and of switches are fed to the Module Boards.

8. The 8048 checks to see whether it completed all 16 cycles to read out all data divided into 16 at the previous stage. If all are completed it goes back to step 1. If not, to 2.

-Switch Reading-

The 8048-012 scans the matrix made of the diodes and switches on the Control Board F to find out which switch is depressed among those of WRITE through MEMORY PROTECT.

1. Diode-Switch Matrix

On the Control Board F, Switches (each accompanying diode) are grouped into 4 blocks consisting of 2 to 8 switches. These blocks are then connected through the data bus to DB0, DB3, DB4, DB6 on 8048-012. The blocks are also routed through to the pins of P20-P27 on Port 2 of 8048-012. They are then making a matrix. (refer to the Circuit Diagram, Control Board F)

2. To Scan the Switches

The 8048-012 outputs "L" onto DB0 alone and "H" on all other DB1-DB7.
They are out on the data bus and latched on IC7, IC8, 74LS175 by the pulses from pin ALE (Address Latch Enable) to be out put onto D0-D6 of TSET.
Next, 8048-012 reads the Port 2 (P20-P27). If it finds here that the P20 alone "L" while all otheres on "H", then it can know of that the SW1 is on.
The above process is repeated to go over all of DB0 to DB7, but four of them are connected to switches.
MEMORY WRITE Switch (SW1) is so wired that it is only enabled when Compu-Memory selection switch is ON with the PROTECTION switch (SW21) being depressed at the same time.
(see circuit diagram, CONTROL BOARD F)

- Reading of CONTROL PANEL -
The PROGRAMMABLE SECTION

The 8048-012 reads the patching on the Control Panel and converts them into digital data of 16 bytes.
(1oyte = 8 bits)

Of the Control Panel, the section named "PROGRAMMABLE" consists of 16 pots and 14 switches, these 16 pots produce 16 different kinds of analog voltage varying between 0V to 5V. The 14 SWs, on the other hand, produce binary digital data of "H" or "L", given by +5V or 0V, respectively. The 16 analog voltages that come in parallel to each other are re-arranged thru the analog multiplexer(MPX) IC5, IC6 4051, to be put on a single line in time sequence.
These outputs of the MPX go into the A/D converter (will be described later) to become 6-bit data of 16 kinds.
The 14 binary data of the switches are also re-arranged into 2 groups of 7 kinds (total 14) with each group entering each respective MPX IC3, IC4 where they are made to 2-bit data and be output fron there in time sequence as above. These 6-bit and 2-bit data are combined to become an 8-bit data. That is to say, that, the patching first made on the Control Panel are become to be represented by all digital data of 16 bytes in all. (refer to Memory Map on page 13)

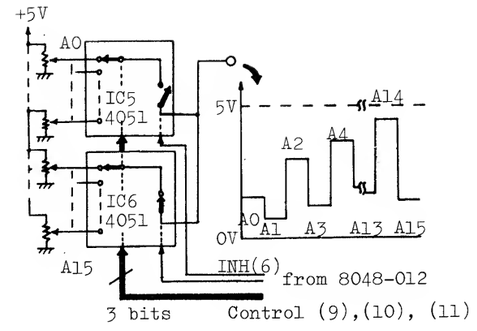

Multiplexer

IC5, IC6, 4051 can be regarded as the same to a rotary switch provided with one more switch on itself as shown above.
Port 1 of 8048 outputs both the Address signal (Control A, B, C, Pins 9, 10, 11), which also serves as switch for 4051 itself for INPUT/OUTPUT Address data, and Chip Enable Signal (INH, Pin 6).
(There are 4 of 4051. Pins 9, 10, 11 of all four are connected through the same lines)

- D/A and A/D Conversion -

1. D/A Converter

The D/A Converter used on the Mother Board is the one called "R-2R type". The converter here is only making use of higher significant 6 bits among those of 8 bits given here, leaving the least significant 2 bits unused.

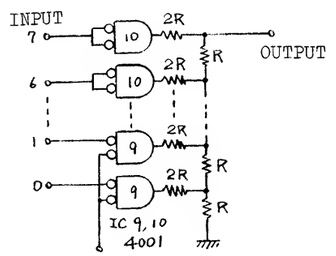

D/A Converter

2. A/D Converter

The A/D Converter on the Mother Board is referred to as " Successive Approximation Type Converter" which make use of the D/A converter and a comparator.
To proceed on with conversion, 8048-012 starts deciding the data at first for the most significant bit, then down to those lesser significant bits.
IC9, IC10 serve as an inverter, making the input to follow negative logic. The output is +5V maximum, therefore, when it receives the input LLLLLLXX, or 0V minimum when HHHHHHXX.
(XX are for those least significant bits that are made nil.)

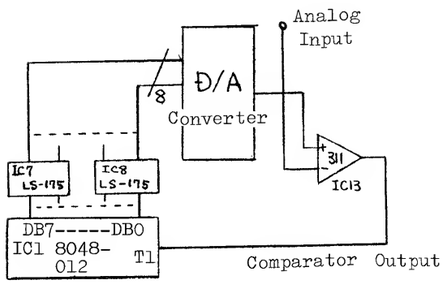

A/D Converter

(Numbers 1-6 below in this section refer to those at top in figure right)
The 8048-012 tries at first putting DB7 to "L", thus making the digital data at first to LHHHHHXX, tentatively. These are latched on LS175 by the pulse from ALE pin, then out onto the D/A converter. On the one hand, 8048-012 reads the output level of the comparator, IC13 311, through T1 pin.
It makes comparison between these two, of the A/D input and of D/A converted output to LHHHHHXX (= 2.5V). If the A/D input is to be as shown in figure (a straight line a little over 2.5V), the comparator finds that the D/A converted output LHHHHHXX(2.5V) is less than that of A/D input. It is to instruct 8048 to decide that the "L" previously put on tentative base can be firm so that "L" is to remain on DB7 hereafter. Now, 8048 turns to DB6 in putting here again "L" tentatively, to output LLHHHHXX. With this data, the D/A output becomes higher than the A/D input as in step 2 on figure. It makes the output of the comparator 311 turn to "H". That means, that 8048 has now to decide that DB6 in "L" is too large, so it must be reset back to H again. The same process continues through the lesser significant bits, as on step 3-6 on figure.

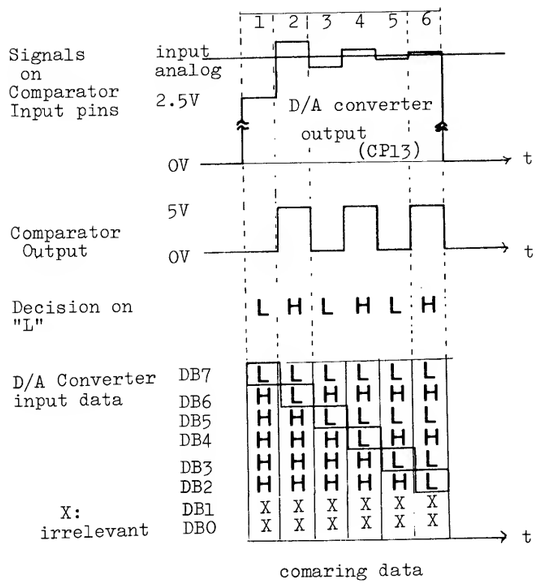

Input:Data Comparison

Each time, the D/A output approaches successively nearest to the A/D input voltage. And finaly, when 8048 completes them all for DB7 to DB2 for bits, it has decided the data on the nearest approximation to be equal to that of input of the A/D converter.

- Memory -

Here provided on this Compu-Phonic Synthesizer are "CMOS RAM", IC2, 5101 for memory of the tone color (timbre) data to be used on Compu-Memory and ROM which resides in 8048-012 for use on PRESET mode.

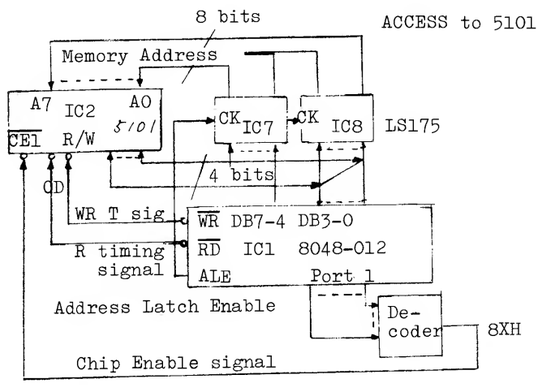

8048-012 outputs from Port 1 the address data to turn the Chip Enable (CE1) to "L" on 5101. Then, 8048-012 outputs the pulses from ALE pin to make LS175 (IC7, IC8) latch the data and define the memory address upon 5101. While the memory address being defined by LS175, 8048-012 outputs onto DB0 to DB3 the data to be written. These data are then written onto 5101 by turning $\overline{WR}$ to "L", and are read by 8048 through DB0 to DB4 when $\overline{RD}$ is "L". The digital data on the Control panel are 8 bits format.
However, when made access to 5101, they are divided into 2 by 8048-012. (Because 5101 handles 4-bit quantities.)
5101 is backed up by the NiCd battery for protection of its memory. The NiCd battery will be fully recharged for more than 48 hours.
The memory on 5101 are also protected for an hour by the electrolytic capacitor (1000mfd 6.3V) just in case when the battery is removed for replacement or other.

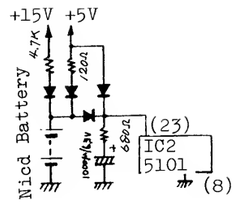

DC Supply for 5101

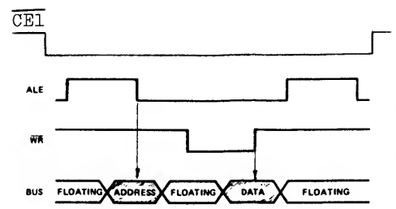

5101 READ/WRITE CYCLE

-- GENERATION of CONTROL SIGNALS to MODULE BOARD(S) --

The control data that were A/D converted to 8-bit digital data are re-converted to 16 kinds of analog voltages and 14 kinds of binary signals before they are sent to the Module Board(s).

1. The 8048-012 reads out these digital data of 16 bytes successively from RAM or ROM. Upper 6 bits (DB7 to DB2) among them are made to analog voltage thru D/A converter and are put on a single line in time sequence and are sent to 16-output analog demultiplexer, DMPX IC31, IC32, 4051.

DMPX here is to separate the input data into 16 at the control signals from 8048-012 (IC31, 32, pins 6, 9, 10, 11). They are held at TL082, IC22 through IC29 to be sent out to the Module Controller and the Module Board.

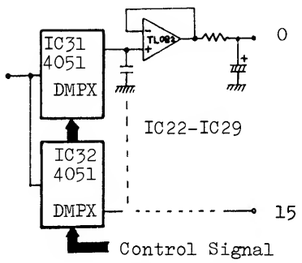

DMPX & HOLD circuits

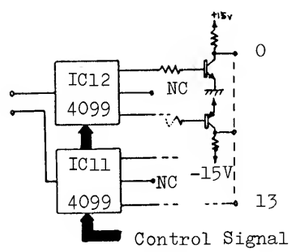

Level Shift Circuits

2. The lower 2 bits data, DB1, DB0 are fed in time sequence to the input pin of each respective address data latch 4099, IC11, IC12. The two 4099s latch them in separate 7 groups under the control signals from 8048-012 (to pins 4, 5, 6, 7).
The outputs of 14 kinds go into the level shift circuit following 4099 where they are shifted into levels each suitable for the purpose to each. (Section surrounding Q3-Q14.)

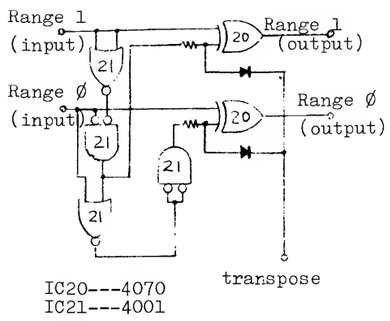

Transpose Subtractor

3. Of the 14, those of VCO-WAVE 1, Ø and LFO-WAVE 1, Ø are fed to the Wave form selector, IC19, IC20 and LFO Select Decoder, IC33, IC34 to receive each respective decoding. VCO-RANGE 1, Ø go into Transpose Subtractor where the contents of the 2-bit data of RANGE 1, Ø are converted when the Transpose Input is turned to "L" Refer to Table for what conversion is meant on this transpose. In effect, it is to go down by 1 octave on VCO range as shown by arrows. Thus, the Switch control signals in 14 kinds become to control the Module Boards after passing through these circuits as above.

Transpose by the Subtractor

TRANSPOSE	H		L	
	RANGE 1	RANGE Ø	RANGE 1	RANGE Ø
32'			L	L
16'	L	H	L	H
8'	H	L	H	L
4'	H	H		

- OTHERS - Reset Circuit

The circuit is to protect 8048-012 from running program inadvertently. When RESET pin 4 is turned to "L", it makes 8048-012 to reset back to the initial state. This is also connected to 8048-011 through the common line. (8048-011, JP-4 only)

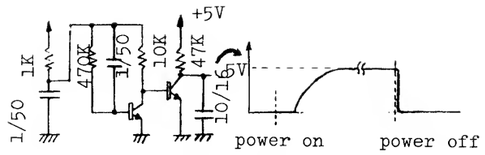

Reset Circuit

- MODULE BOARDS -

Included here are VCO, VCF, VCA and 2 ENV GENERATORS.

1. VCO and its Peripherals

IC1a(pin 1,2 and 3)makes the vibrato voltage VCO CONT and keyboard key voltage KCV mixed and sends them out onto the antilog transistor IC2 which outputs antilog current from pin 9. This antilog current is then compared at the Comparator IC5b(pin 5,6, 7) with the current flowing in from pin 6 of IC4 thru R118.

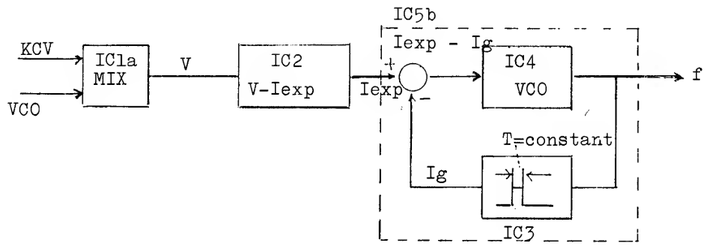

f-I: feedback loop

The output of the comparator IC5b is made to control the VCO generator oscillation frequency produced from IC4, Gate IC. Here, however, the VCO has to make the oscillation in such frequency that it always keeps the difference at zero in values between the current Ig from pin 6 of IC4 and the antilog current I-exp from the antilog IC2.

The VCO outputs are in the pulse form of the constant width converted by the one shot multivibrator IC3(555). It is therefore necessary to double the number of pulses if the antilog current is doubled. IC5b watches this to keep the balance at this pin 6. And, if losing the balance, it sends an additional voltage onto VCO to make it regain the balance. These are the process how to output the frequency which is antilog-proportional to the input voltage. The pulse output here is of so narrow width as yet. It is necessary therefore to provide further wave conversion.

IC6 is a frequency divider. IC7 is a multiplexer to make selection from those divided frequency,

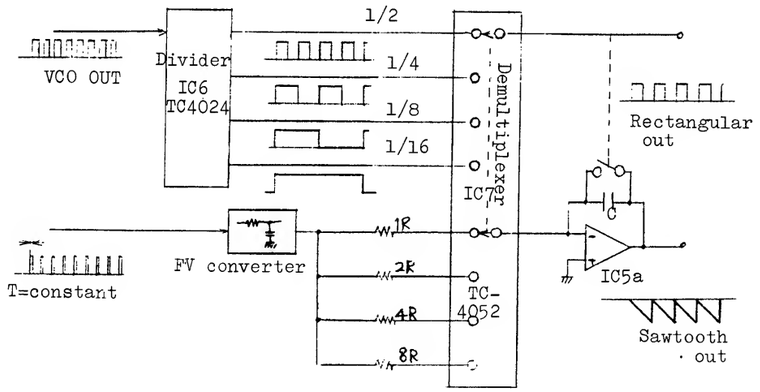

IC5a generates sawtooth waveform synchronized to that of the selected frequency. The amplitude of the sawtooth waveform is kept constant by choosing either of R18-R24 by the multiplexer IC7 regardless of any change made at the tone feet.

On PROMARS, it has a VCO 9 Board for its 2nd VCO. This Board is in effect just as the same that the VCO section is only taken out from the Module Board stated herein.

2. VCF and its Peripherals

VCF here is not much different from those on the conventional synthesizer. IC11 is the high-pass filter. IC12-IC15 are the low-pass filters. IC17 is the circuit for setting Q for the low-pass filters.

IC18 is the electronic potentiometer to control the depth of the cutoff frequency modulation. IC19 (pins 5,6,7) is the cutoff frequency control mixer. Q8 and Q9 are the antilog current generation circuit.

3. Envelope Generator

There are two Envelope Generators, one each for VCF and VCA.

They are basically the circuits to voltage-control the time or the level of A, D, S, R. Since the signals are now in the pulse form, being voltage-pulse converted on the Module Control Board, the A,D and R controls are to be achieved by controlling the number of pulses in a given time. Note that, these pulses here are of so narrow width that it may easily be lost of sight from screen on the oscilloscope if the pulse intervals were extended a little long.

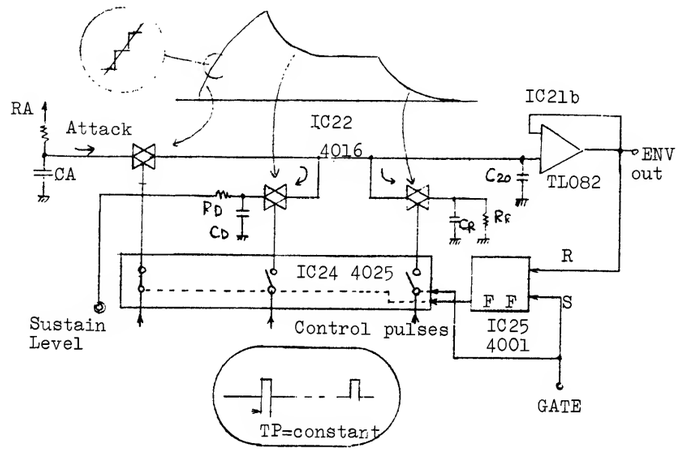

IC25 is the flip-flop which inverts itself on arriving at the attack level. IC24 is the gate selecting the pulse for each of A, D, and R by the timing of the flip flop. IC22 is the analog switch which turns on only when there is a pulse arrival, thus making C20 to charge-discharge, accordingly.

On such charge/discharge, envelopes are developed. The envelopes from C20 are fed through buffer IC21 to obtaine low output impedance.

- MODULE CONTROLLER -

Module Controller Board is to control those on Module Board as follows:

- VCO modulation
- VCF modulation
- VCA modulation
- Generation of the clock signals to control ENV GEN.
- Cutoff frequency of HPF
- Pulse width modulation of VCO

The Module Controller performs these functions by converting the control signals fed from the Mother Board or those fed from the Bender Board into such signals to suit for controlling the modules.

Here also included are the Noise Generator and LFO Delay Circuit.

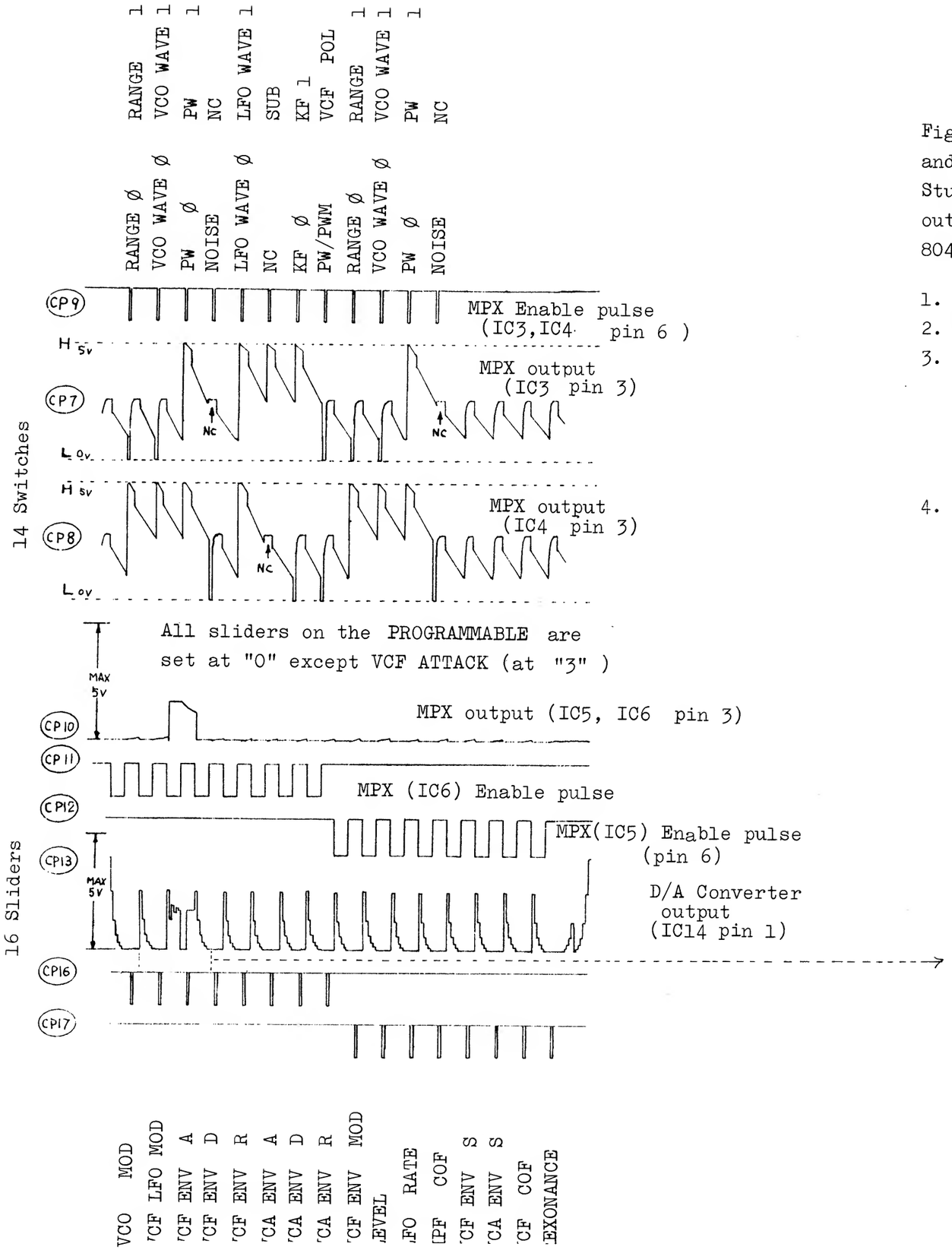

MOTHER BOARD TIMING DIAGRAM in MANUAL MODE (SLIDER/SWITCH READ/HOLD, A/D & D/A CONVERSIONS, MPX and DMPX)

Figure below is part of CP9, 11, 12, 17 and 13 at the left showing functions and timings of A/D, D/A conversions and the Switch reading.
Studing D/A conversion theory on the Mother Board by observing the converter output waveform is very helpful in understanding the operation of microcomputer 8048-012.

1. The computer 8048-012 reads Sliders set positions through A/D conversion.
2. The computer reads,between A/D and D/A conversions, Panel switches status.
3. In Manual Mode, at CP13, final of A/D and D/A outputs are equal in level. This means that Panel Data are fed into Synthesizer Modules as they are. However, in other modes, A/D and D/A show different values because they are out of relation to each other, D/A converter transforms digital data from the memory.
4. During D/A conversion, sliders data being D/A converted from 6-bit format and switch data from 2-bit format are held (latched) and output to the synthesizer modules.

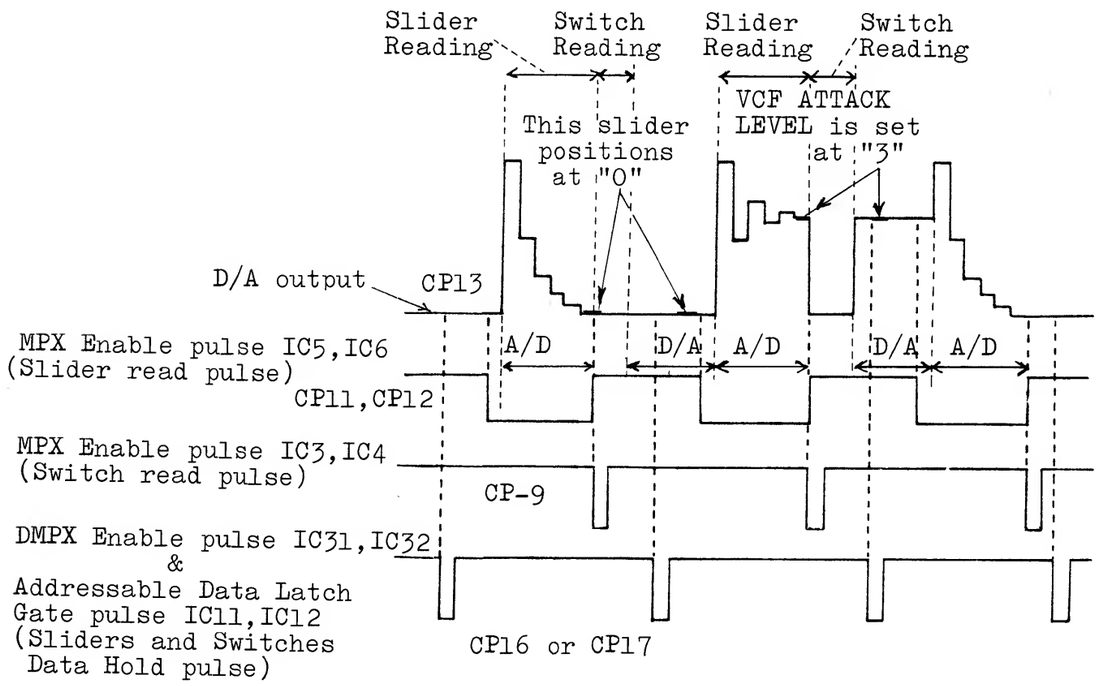

Signals Flow Diagram on the Mother Board

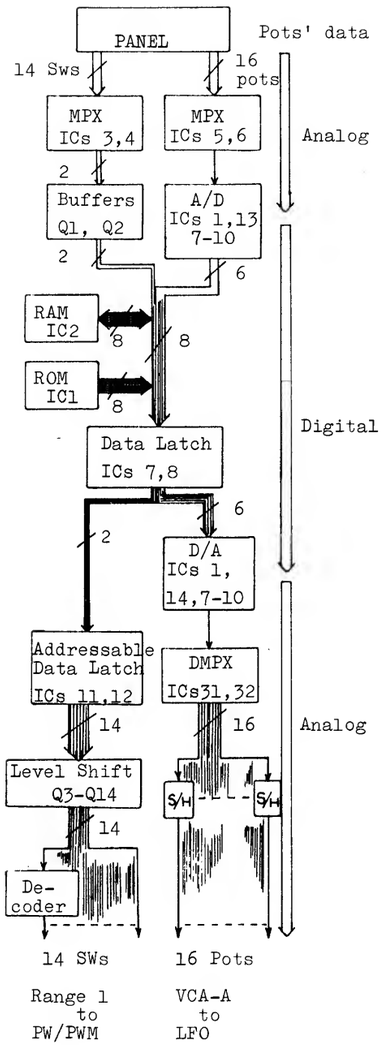

to Synthesizer Modules

⟹ Indicate Data Flows from the Control Panel. Will be output to the Synthesizer Modules only in Manual Mode.

➡ Show Data to/from the Memories in Compu-Memory and Preset Modes. Will not be output to the Synthesizer Modules in Manual Mode.

⟹ Common lines for the data from the Control Panel and the Memories.

DESIGNATION		PIN NO.	FUNCTION
DB (Data Bus)	DB0	12	Panel Switches Data / Panel Sliders Data
	1	13	
	2	14	
	3	15	
	4	16	
	5	17	
	6	18	
	7	19	
PORT 1	P10	27	I/O address 4051: IC3-IC6, IC31-IC32 4099: IC11, IC12 5101: IC2 $\overline{CE}$ 1 select
	11	28	
	12	29	
	13	30	
	14	31	
	15	32	
	16	33	
	17	34	
PORT 2	P20	21	Switch Scan Reading Data
	21	22	
	22	23	
	23	24	
	24	35	
	25	36	
	26	37	
	27	38	
XTAL 1		2	Inputs for internal Clock Oscillator
XTAL 2		3	
RESET		4	Reset pulse input
T 1		39	Comparator output signal input during A/D conversion
$\overline{RD}$		8	Memory read timing signal output
$\overline{WR}$		10	Memory/Write timing signal output
ALE		11	DB Data latch pulse output

Push Switches Scanning — RAM address — Sliders and Switches Data during RAM address

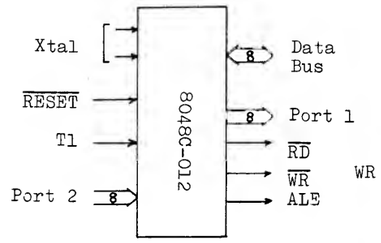

8048-012 Logical Symbol

(Top View)

μPD8048

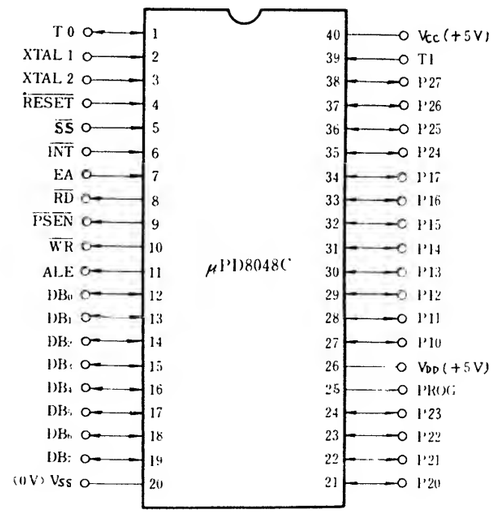

The μPD8048 is an 8-bit parallel computer fabricated on a single silicon chip. The 8048 contains a 1K x 8 ROM program memory, 27 I/O lines, an 8-bit timer/counter and clock circuits.
Used in the Compu-Phonic Synthesizers are μPD8048-012 and μPD-8048-011 (JP-4 only) versions in which programs and data dedicated to the Compu-Phonics are stored in the program memories.

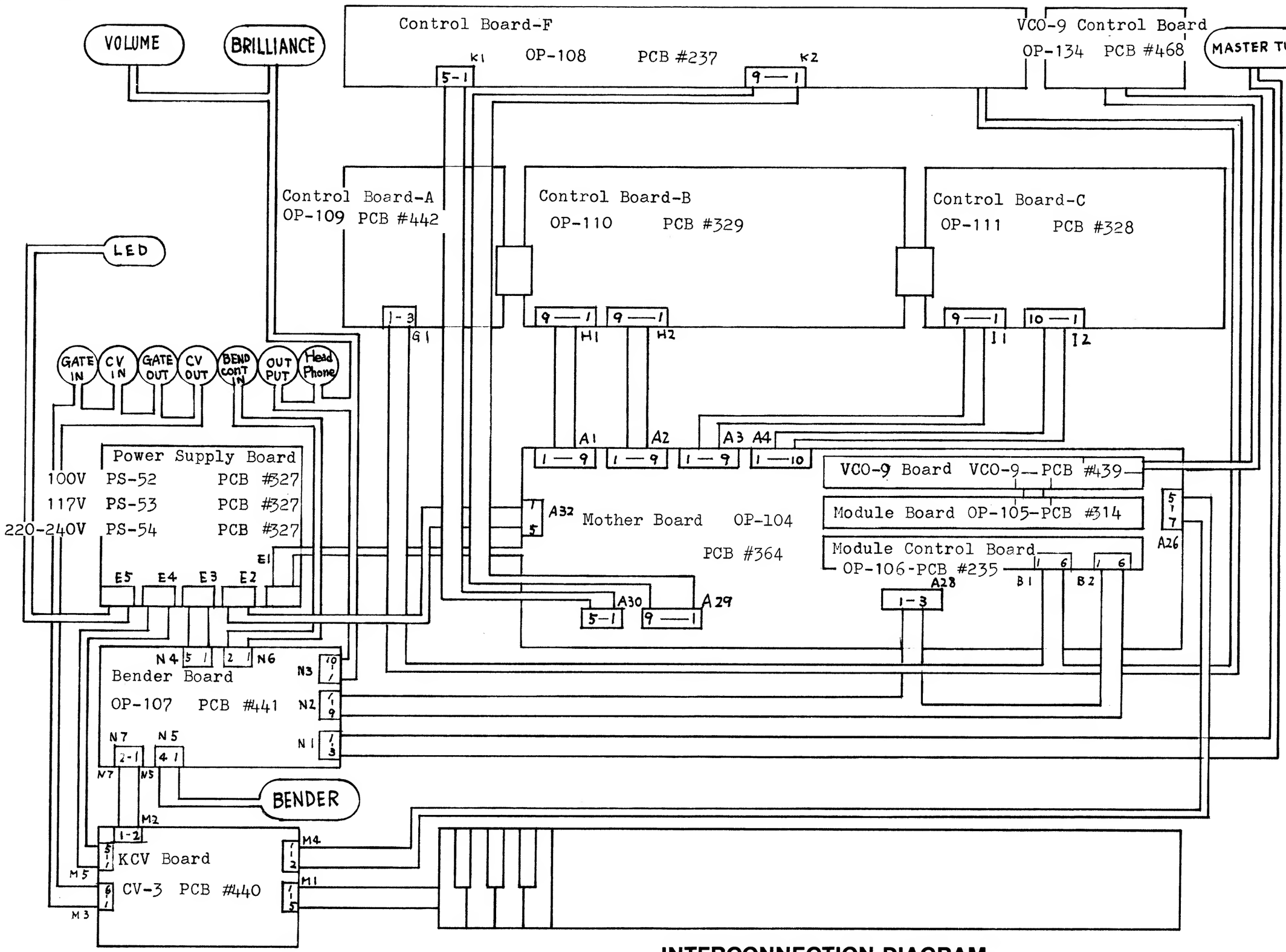

INTERCONNECTION DIAGRAM

7-STAGE BINARY COUNTER — TC4024P

TRUTH TABLE

CLOCK △	CLEAR	OUTPUT STATE
※	H	All Outputs = 'L'
↓	L	No Change
↑	L	Advance to Next State

△ ; Level Change, ※ ; Don't care

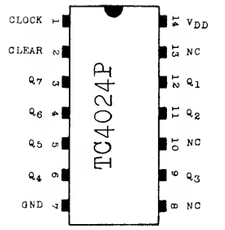

LOGIC DIAGRAM

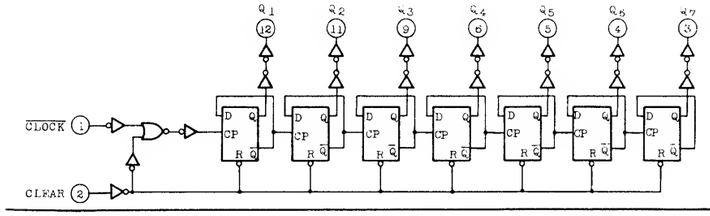

SN74LS174 HEX D-TYPE FLIP-FLOP

(TOP VIEW)

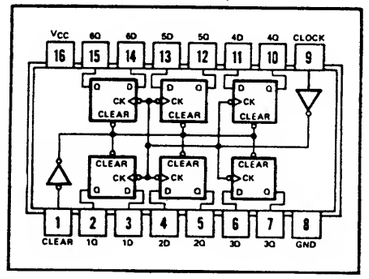

H = high level (steady state)
L = low level (steady state)
X = irrelevant
↑ = transition from low to high level
Q_0 = the level of Q before the indicated steady-state input conditions were established.
† = '175, 'LS175, and 'S175 only

SN74LS175 QUADRUPLE D-TYPE FLIP-FLOP

(TOP VIEW)

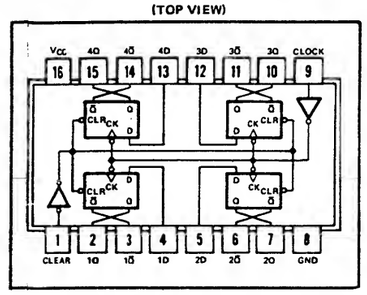

FUNCTION TABLE
(EACH FLIP-FLOP)

INPUTS			OUTPUTS	
CLEAR	CLOCK	D	Q	Q̄ †
L	X	X	L	H
H	↑	H	H	L
H	↑	L	L	H
H	L	X	Q_0	$\bar{Q}_0$

TC4051BP SINGLE 8-CHANNEL MULTIPLEXER/DEMULTIPLEXER
TC4052BP DIFFERENTIAL 4-CHANNEL MULTIPLEXER/DEMULTIPLEXER

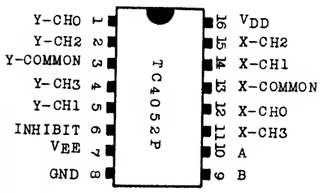

74LS00

QUADRUPLE 2-INPUT POSITIVE-NAND GATES

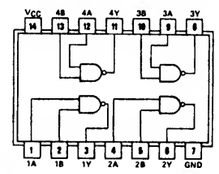

TRUTH TABLE

CONTROL INPUTS				'ON' CHANNEL		
INHIBIT	C △	B	A	TC4051BP	TC4052BP	TC4053BP
L	L	L	L	0	0X, 0Y	0X, 0Y, 0Z
L	L	L	H	1	1X, 1Y	1X, 0Y, 0Z
L	L	H	L	2	2X, 2Y	0X, 1Y, 0Z
L	L	H	H	3	3X, 3Y	1X, 1Y, 0Z
L	H	L	L	4	—	0X, 0Y, 1Z
L	H	L	H	5	—	1X, 0Y, 1Z
L	H	H	L	6	—	0X, 1Y, 1Z
L	H	H	H	7	—	1X, 1Y, 1Z
H	※	※	※	NONE	NONE	NONE

※ Don't Care, △ Except TC4052BP

TC4069

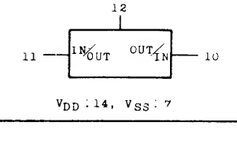

TC4049P

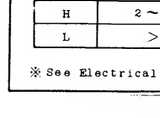

BA662

LM311

Dual-In-Line Package

Metal Can Package

NOTE Pin 4 connected to case.
TOP VIEW

μPD5101C-E

PIN CONFIGURATION

LOGIC SYMBOL

TRUTH TABLE

$\overline{CE}_1$	CE_2	OD	R/W	D_{IN}	Output	Mode
H	X	X	X	X	High Z	Not Selected
X	L	X	X	X	High Z	Not Selected
X	X	H	H	X	High Z	Output Disabled
L	H	H	L	X	High Z	Write
L	H	L	L	X	D_{IN}	Write
L	H	L	H	X	O_{OUT}	Read

BLOCK DIAGRAM

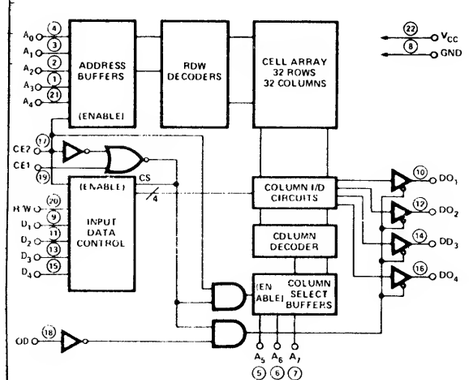

TC4001P QUAD 2-INPUT POSITIVE NOR GATE
TC4025P TRIPLE 3-INPUT POSITIVE NOR GATE

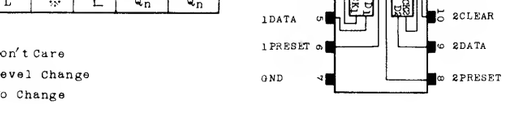

TL082, TL072
LM353
μPC4558C

Connection Diagram (Top View)

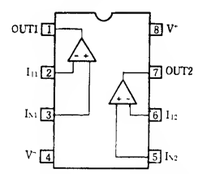

TC4011P QUAD 2-INPUT POSITIVE NAND GATE

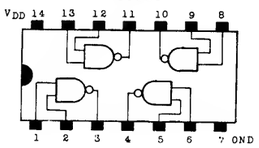

QUAD EXCLUSIVE-OR GATE — MC14070B / TC4030BP

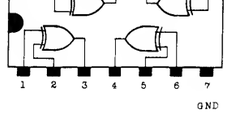

TRUTH TABLE

INPUTS		OUTPUT
A	B	X
L	L	L
L	H	H
H	L	H
H	H	L

TC4016 QUAD BILATERAL SWITCH

BLOCK DIAGRAM

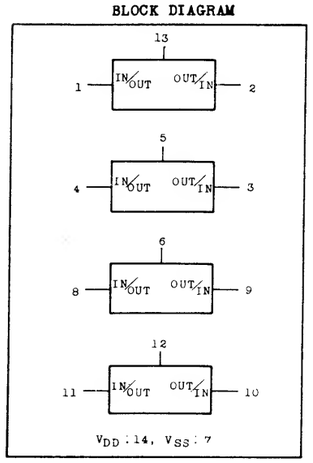

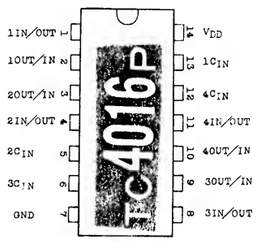

TRUTH TABLE

CIN	Impedance Between IN/OUT — OUT/IN ※
H	$2 \sim 20 \times 10^2 \Omega$
L	$> 10^9 \Omega$

※ See Electrical Characteristics

BLOCK DIAGRAM

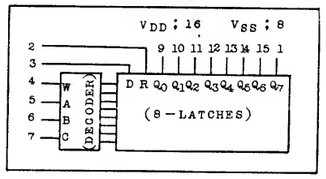

TC4099BP

TRUTH TABLE — TC4099BP 8-BIT ADDRESSABLE LATCH

CONTROL INPUTS		ADDRESS INPUTS			OUTPUTS							
RESET	W.DIS.	C	B	A	Q0	Q1	Q2	Q3	Q4	Q5	Q6	Q7
H	H	✱	✱	✱	L	L	L	L	L	L	L	L
L	H	✱	✱	✱	—	—	—	—	—	—	—	—
H	L	L	L	L	D	L	L	L	L	L	L	L
H	L	L	L	H	L	D	L	L	L	L	L	L
H	L	L	H	L	L	L	D	L	L	L	L	L
H	L	L	H	H	L	L	L	D	L	L	L	L
H	L	H	L	L	L	L	L	L	D	L	L	L
H	L	H	L	H	L	L	L	L	L	D	L	L
H	L	H	H	L	L	L	L	L	L	L	D	L
H	L	H	H	H	L	L	L	L	L	L	L	D
L	L	L	L	L	D	—	—	—	—	—	—	—
L	L	L	L	H	—	D	—	—	—	—	—	—
L	L	L	H	L	—	—	D	—	—	—	—	—
L	L	L	H	H	—	—	—	D	—	—	—	—
L	L	H	L	L	—	—	—	—	D	—	—	—
L	L	H	L	H	—	—	—	—	—	D	—	—
L	L	H	H	L	—	—	—	—	—	—	D	—
L	L	H	H	H	—	—	—	—	—	—	—	D

✱ ; DON'T CARE D ; DATA INPUT
— ; HOLDS PREVIOUS DATA

TRUTH TABLE

INPUTS				OUTPUTS	
CL	PR	D	CP △	Q_{n+1}	$\bar{Q}_{n+1}$
L	H	※	※	H	L
H	L	※	※	L	H
H	H	※	※	L	H
L	L	L	↓	L	H
L	L	H	↓	H	L
L	L	※	↑	Q_n •	$\bar{Q}_n$ •

※ ; Don't Care
△ ; Level Change
• ; No Change

TC4013P

DUAL D-TYPE FLIP-FLOP

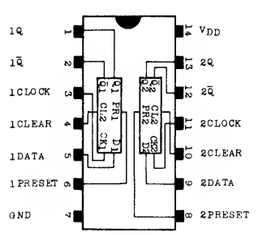

CONTROL BOARD A

CONTROL BOARD B

CONTROL BOARD C

MODULE CONTROL BOARD

VCO-9 BOARD
MODULE BOARD

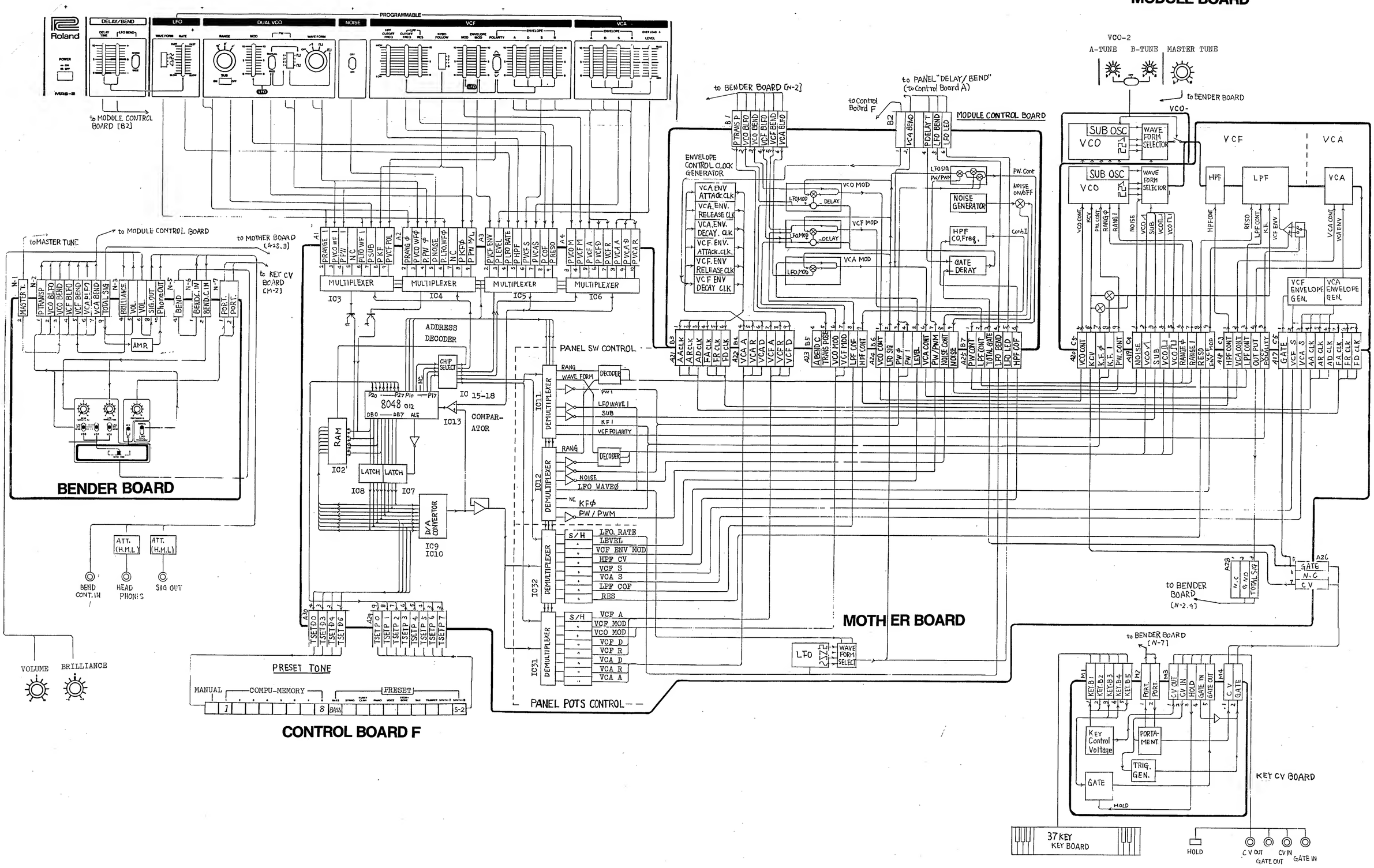

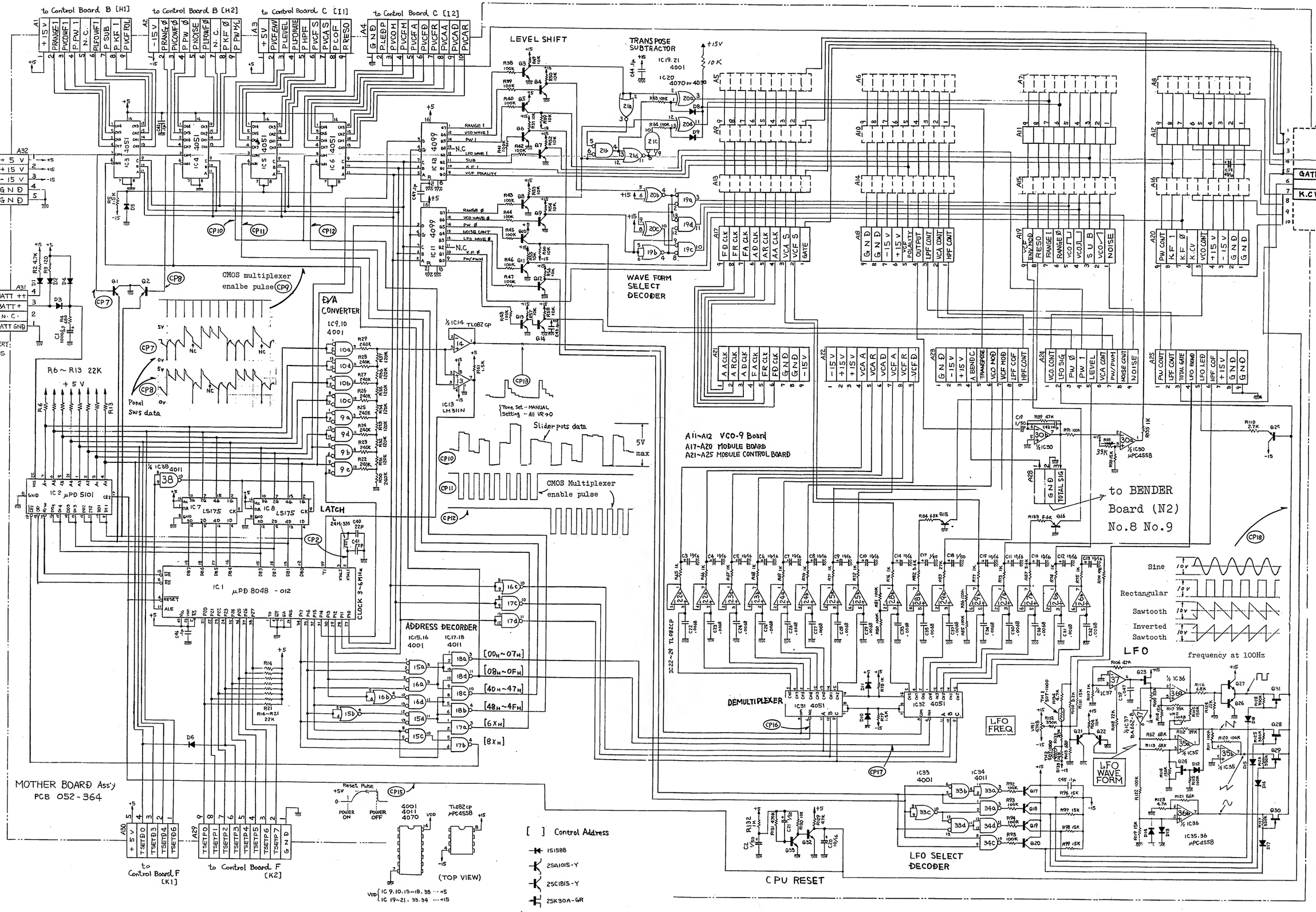
to Control Board B [H1]
to Control Board B [H2]
to Control Board C [I1]
to Control Board C [I2]
LEVEL SHIFT
TRANSPOSE SUBTRACTOR
WAVE FORM SELECT DECODER
D/A CONVERTER
CMOS multiplexer enalbe pulse
Panel SWS data
Slider pots data
CMOS Multiplexer enable pulse
LATCH
ADDRESS DECORDER
DEMULTIPLEXER
A1~A12 VCO-9 Board
A17~A20 MODULE BOARD
A21~A25 MODULE CONTROL BOARD
to BENDER Board (N2) No.8 No.9
Sine
Rectangular
Sawtooth
Inverted Sawtooth
LFO
frequency at 100Hz
LFO FREQ
LFO WAVE FORM
LFO SELECT DECODER
CPU RESET
MOTHER BOARD Ass'y PCB 052-364
to POWER SUPPLY BOARD
to Control Board F [K1]
to Control Board F [K2]
[ ] Control Address
GATE
K.CV

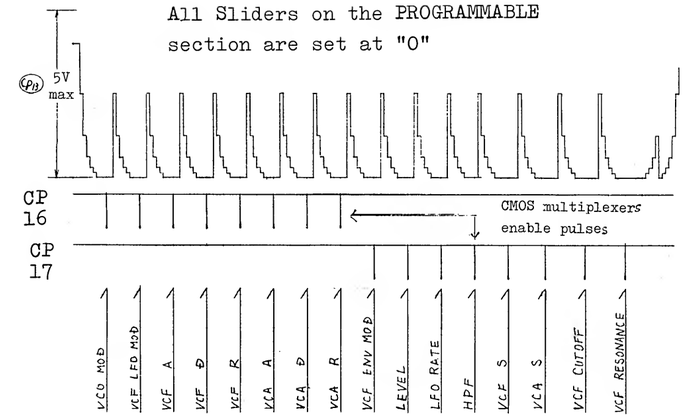

MOTHER BOARD OP-104B

(Etch mask 052-364B)

IMPORTANT

In replacing the Mother board, check both the existing board and the new replacement board for existance or absence of Q15 and Q16. If different, see page 19 for modification.

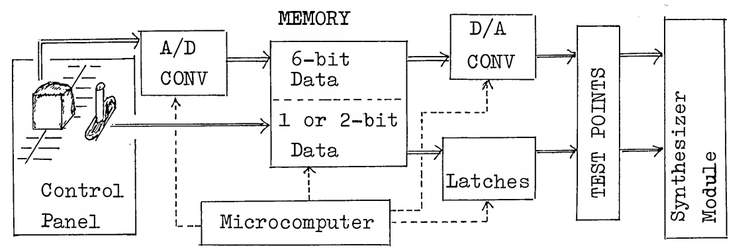

Figures in TP colum in the table to immediate right and figures at top of the other tables refer to test points shown in the PCB layout below. The following applies.

1. For sliders; voltage will vary within the range of OV to +5V as the designated slider is being moved.
2. For switches; the output will be a logical 0 (low) or 1 (high): (OV,+15V),(-15V,+5V),(OV,+5V), depending on the lever position.

TP	SLIDER
20	VCO MOD
21	VCF MOD
22	VCF ENV A
19	VCF ENV D
18	VCF ENV R
15	VCA ENV A
17	VCA ENV D
16	VCA ENV R
28	VCF ENV MOD
29	VCA LEVEL
30	LFO RATE
27	HPF C O F
26	VCF ENV S
23	VCA ENV S
25	LPF C O F
24	LPF RES

NOISE

TP	11
OFF	0
ON	1

SUB

TP	5
OFF	0
ON	1

VCF POLARITY

TP	7
NORMAL	1
INVERT	0

VCF KEY FOLLOW

TP	6	13
3	0	0
2	0	1
1	1	0
0	1	1

LFO WAVEFORM

TP	4	12
∿	1	1
⊓	1	0
◿	0	1
◹	0	0

VCO WAVEFORM

TP	2	9
OFF	0	0
◿	1	1
⊓	1	0
⊓	0	1

PULSE WIDTH

TP	3	10
4/ ⊓	1	1
3/	1	0
2/	0	1
1/ ⊓	0	0

PW/PWM

TP	14
MANUAL	1
LFO MOD	0

VCO RANGE

TP	1	8
16'	0	1
8'	1	0
4'	1	1

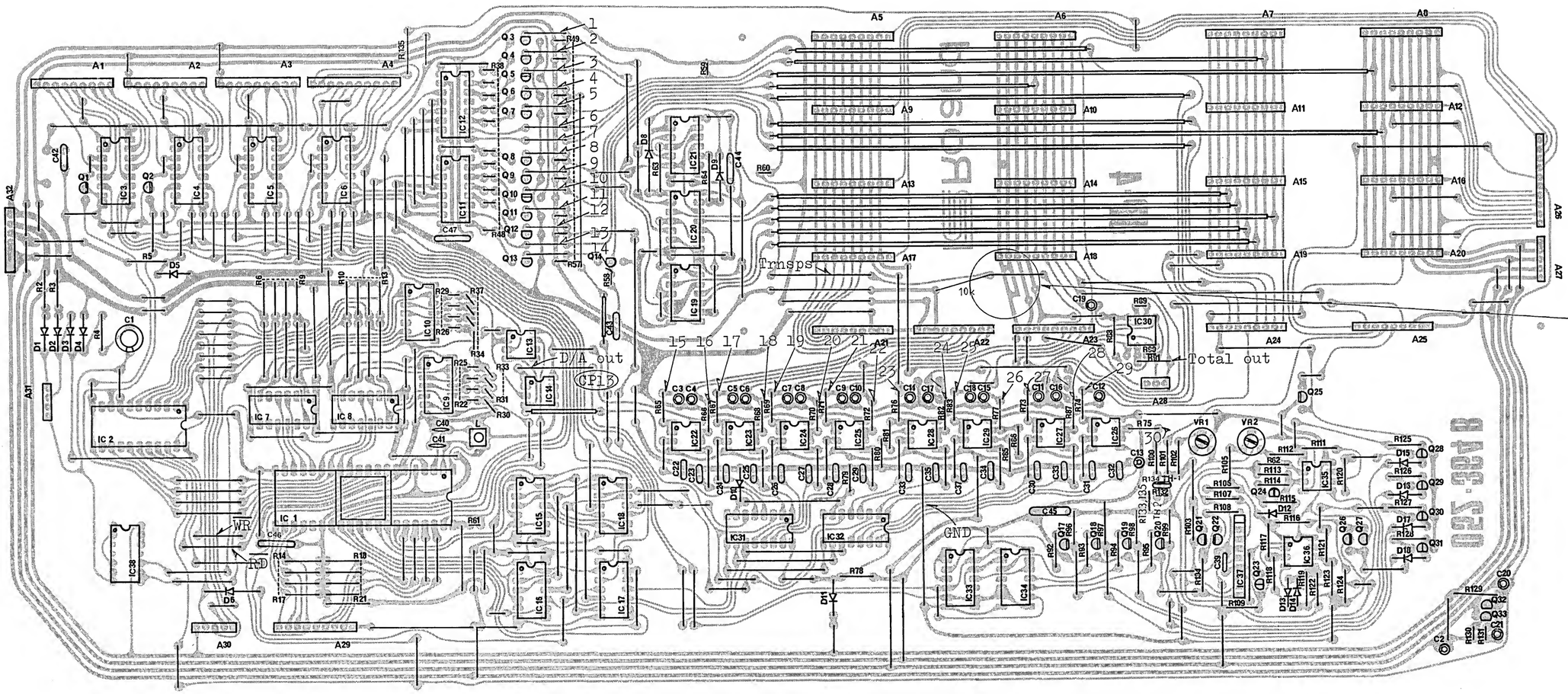

Components on foil side:

C48, C49

Connector A6, A10, A14, A18, A23 (connections to Power Supply Board E1)

BENDER BOARD OP-107B (149-107B)

View from foil side

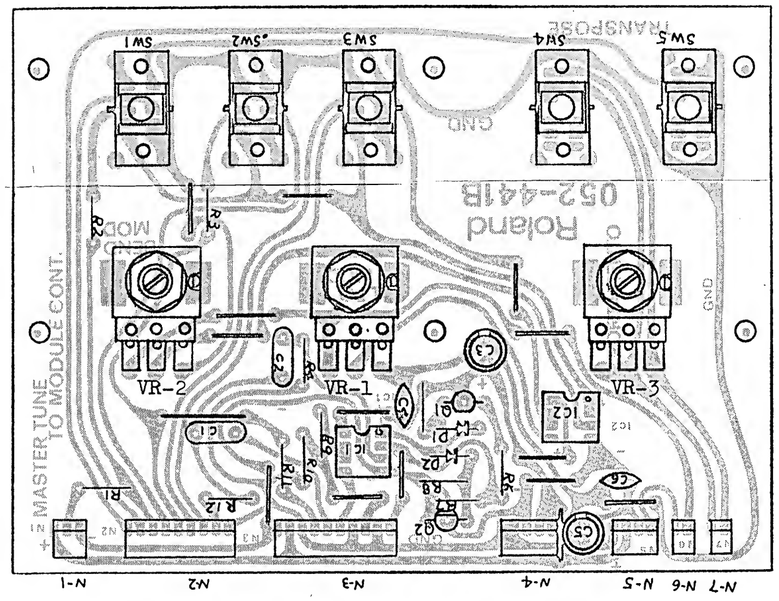

OP-107

SW1,2,3
LBC-23M-18K (001-238)
SW4,5
LBC-42M-18K (001-237)
VR3 VM10RB10C2MAK20 (028-756)

VR1,2
VM10RB10C50KBK20 (028-762)

CONTROL BOARD F-c

(Etch mask 052-237C)

OP-108C (149-108C)

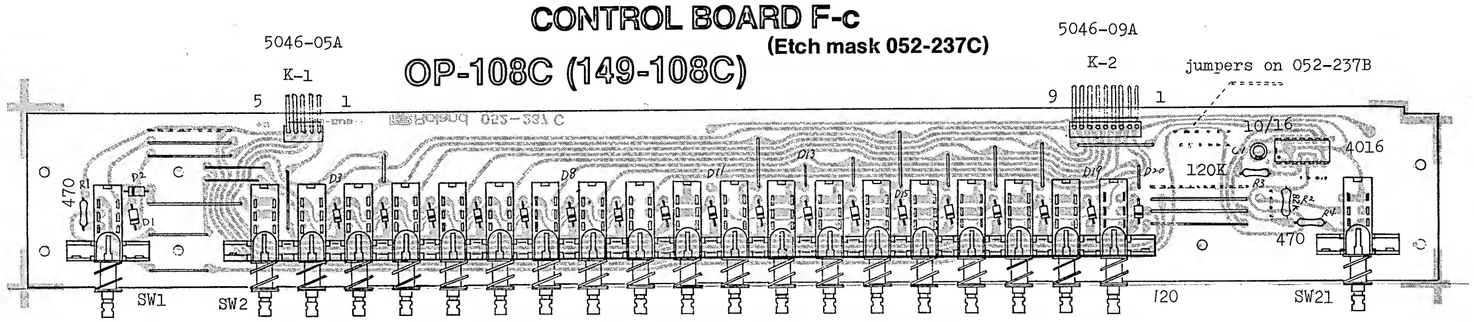

Switch SUF-12 (001-225)

Switch SUF-J2 (001-250)

all diodes: 1S1588

Switch SUF-12 (001-225)

CONTROL BOARD B-d OP-110D (149-110D)

View from foil side

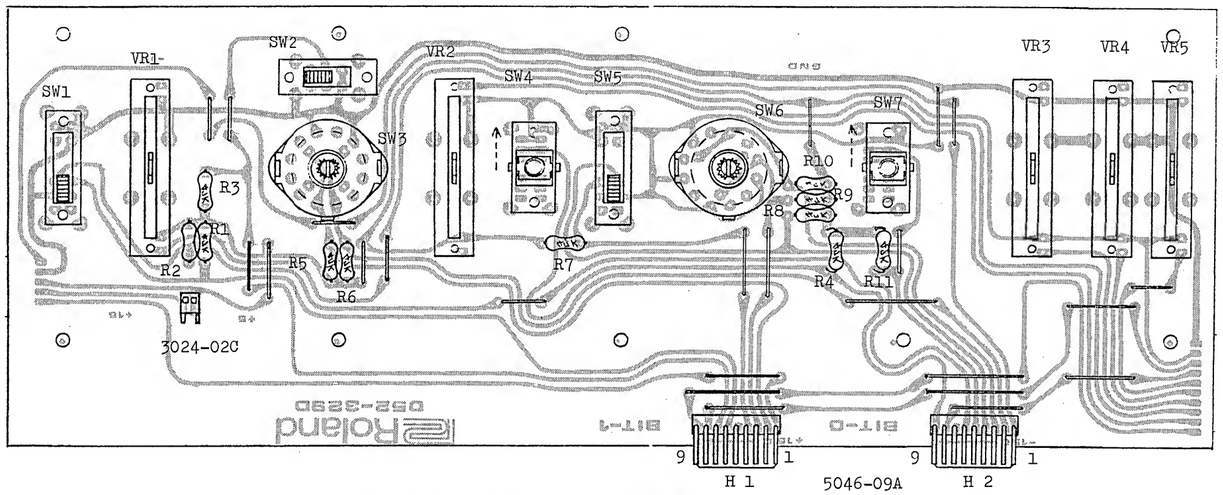

LEVEL SW BOARDS

I PHONES OP-112A (149-112A)

II OUTPUT OP-113A (149-113A)

(PCB 052-443A)

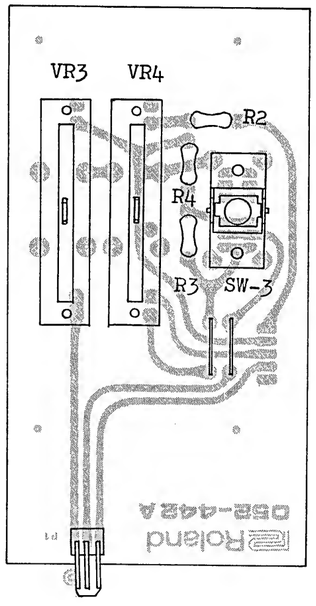

CONTROL BOARD A- a

OP-109A (149-109A)

View from foil side

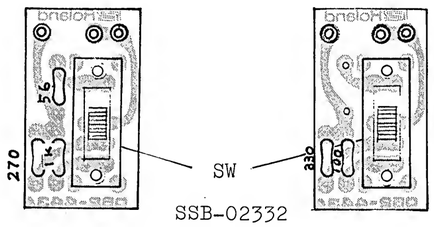

OP-134

VRs EVH-LWAD25B15 (030-951)
SWs LBC-23M-18K (001-238)

CONTROL A OP-109

VR3 EVA-V17C16C26 (029-370)
VR4 EVA-V23C16B54 (029-426)
SW3 LBC-42-18K (001-237)

CONTROL B

SW1,5
SQPR-2412P (001-228)
SW2 SSB-022 (001-182)
SW3 SRM-1034-K15 (001-234)
SW4,7
LBC-42M-18K (001-237)
SW6 SRM-1043-K15 (001-224)
All Pots
EVA-V17C16B54 (029-355)

VCO-9 CONTROL BOARD

OP-134A (149-134A)

View from foil side

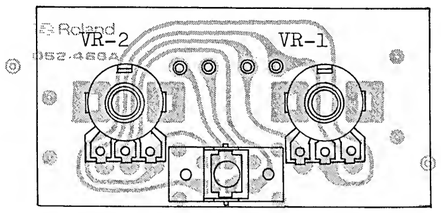

CONTROL C

SW1 SQPR-2412P (001-228)
SW2 LBC-42M-18K (001-237)
All Pots
EVA-V17C16B54 (029-355)

OP-111B (149-111B)

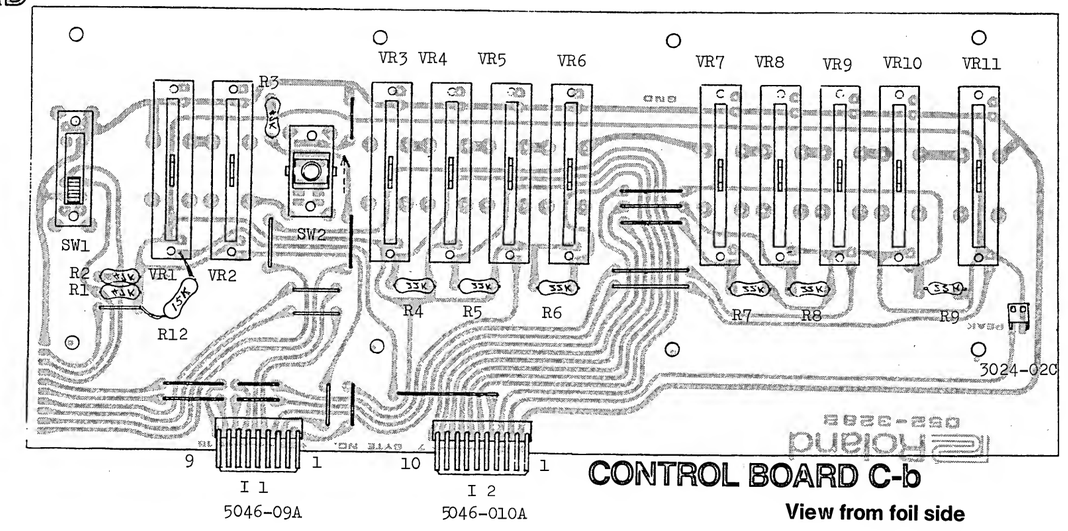

CONTROL BOARD C-b

View from foil side

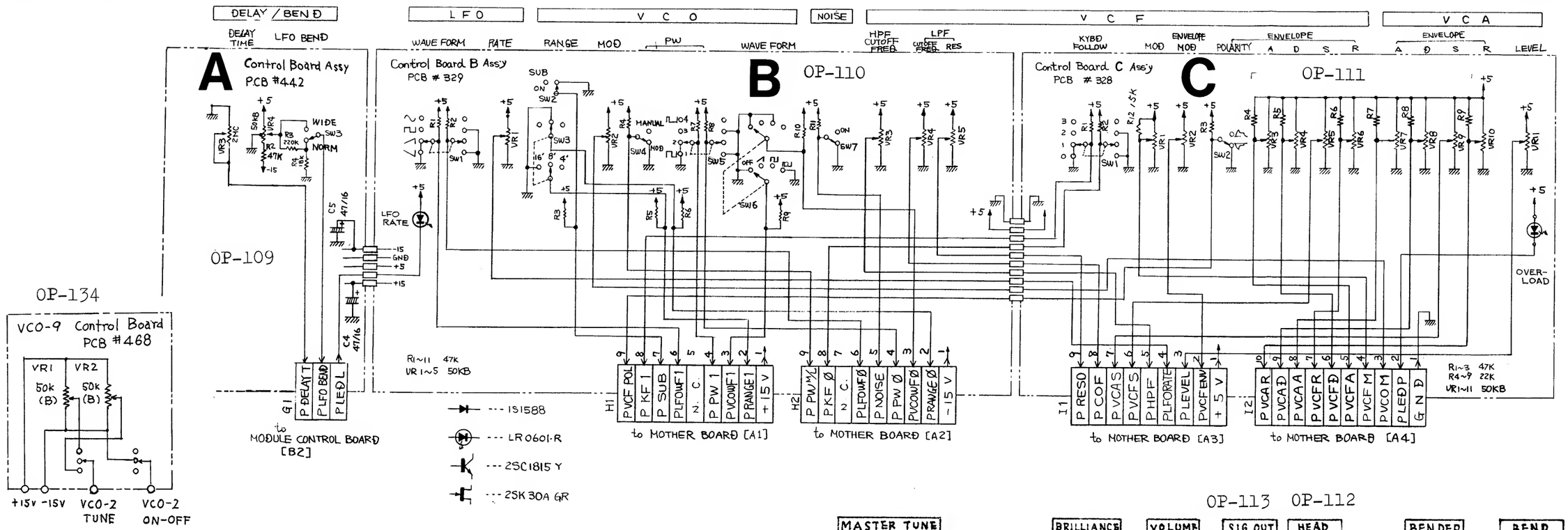
DELAY / BEND
LFO
VCO
NOISE
VCF
VCA
A Control Board Assy PCB #442
B Control Board B Assy PCB # 329 OP-110
C Control Board C Assy PCB # 328 OP-111
OP-109
OP-134
VCO-9 Control Board PCB #468
to MODULE CONTROL BOARD [B2]
to MOTHER BOARD [A1]
to MOTHER BOARD [A2]
to MOTHER BOARD [A3]
to MOTHER BOARD [A4]
OVER-LOAD
--- 1S1588
--- LR0601-R
--- 2SC1815 Y
--- 2SK30A GR

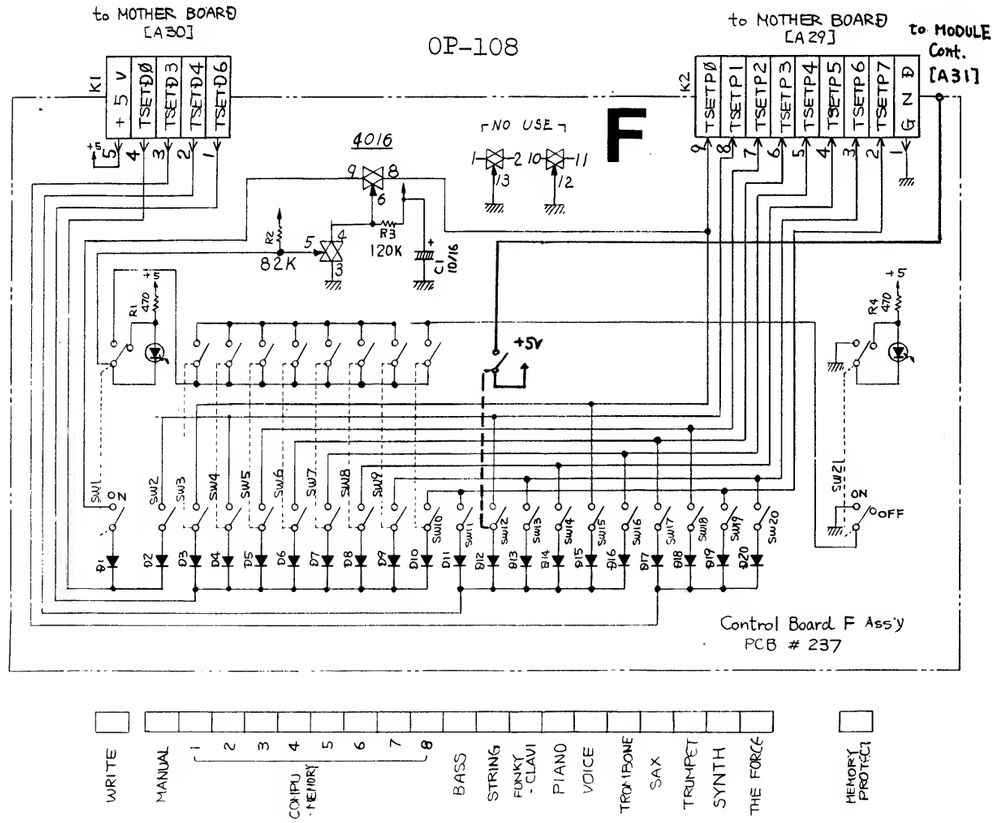
OP-108
F
to MOTHER BOARD [A30]
to MOTHER BOARD [A29]
to MODULE Cont. [A31]
Control Board F Ass'y PCB # 237
WRITE
MANUAL
COMPU-MEMORY
BASS
STRING
FUNKY-CLAVI
PIANO
VOICE
TROMBONE
SAX
TRUMPET
SYNTH
THE FORCE
MEMORY PROTECT

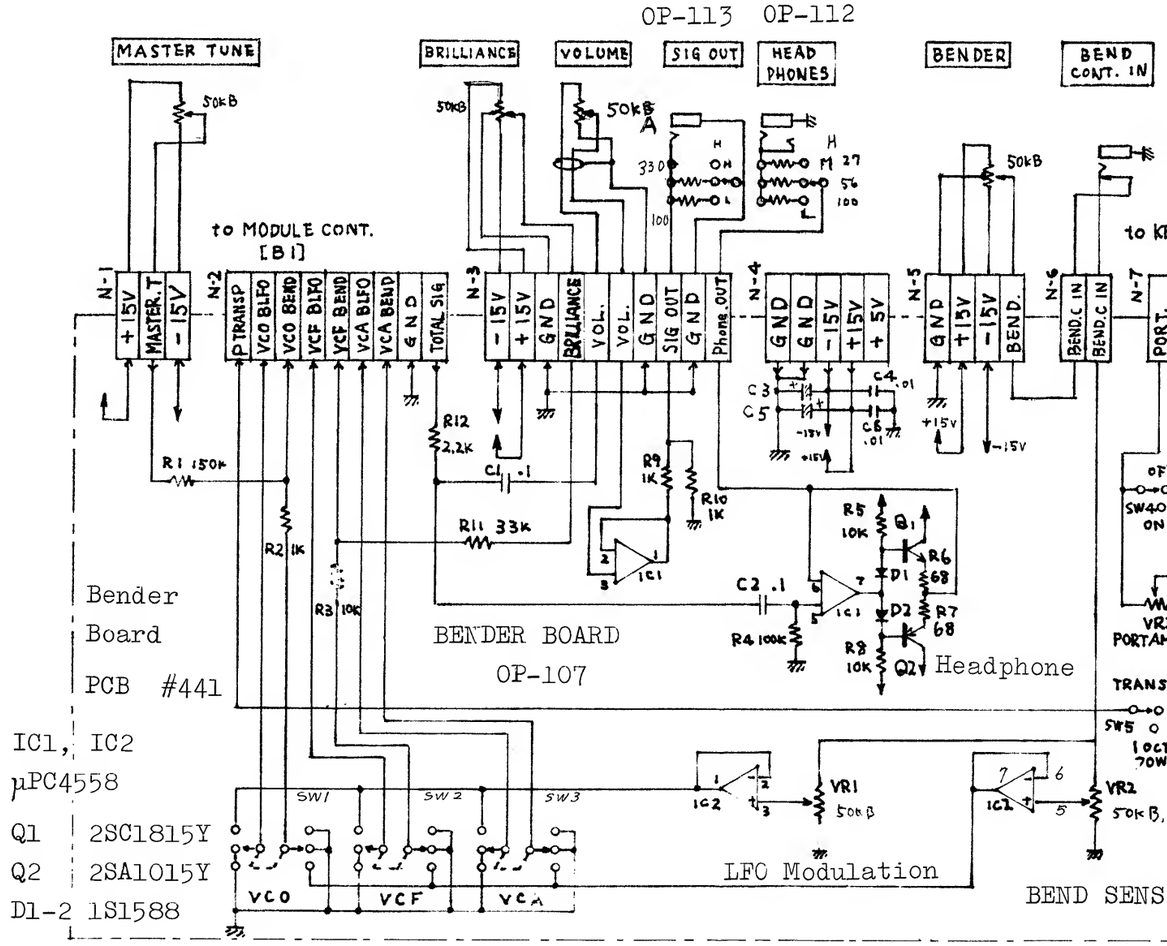
OP-113 OP-112
MASTER TUNE
BRILLIANCE
VOLUME
SIG OUT
HEAD PHONES
BENDER
BEND CONT. IN
to MODULE CONT. [B1]
to KEY CV BOARD
Bender Board PCB #441
BENDER BOARD OP-107
Headphone
LFO Modulation
BEND SENS.
IC1, IC2 µPC4558
Q1 2SC1815Y
Q2 2SA1015Y
D1-2 1S1588

VCO-9A (152-009A)
(PCB 052-439A)

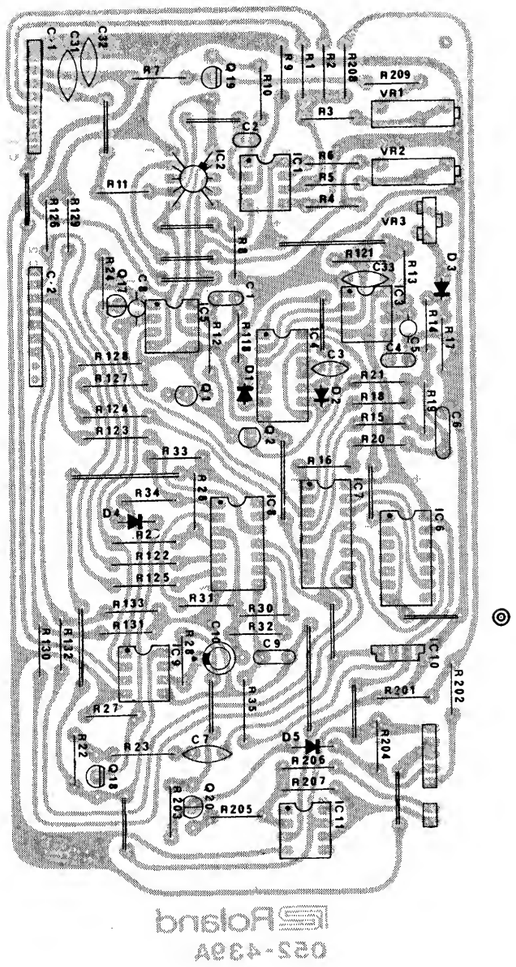

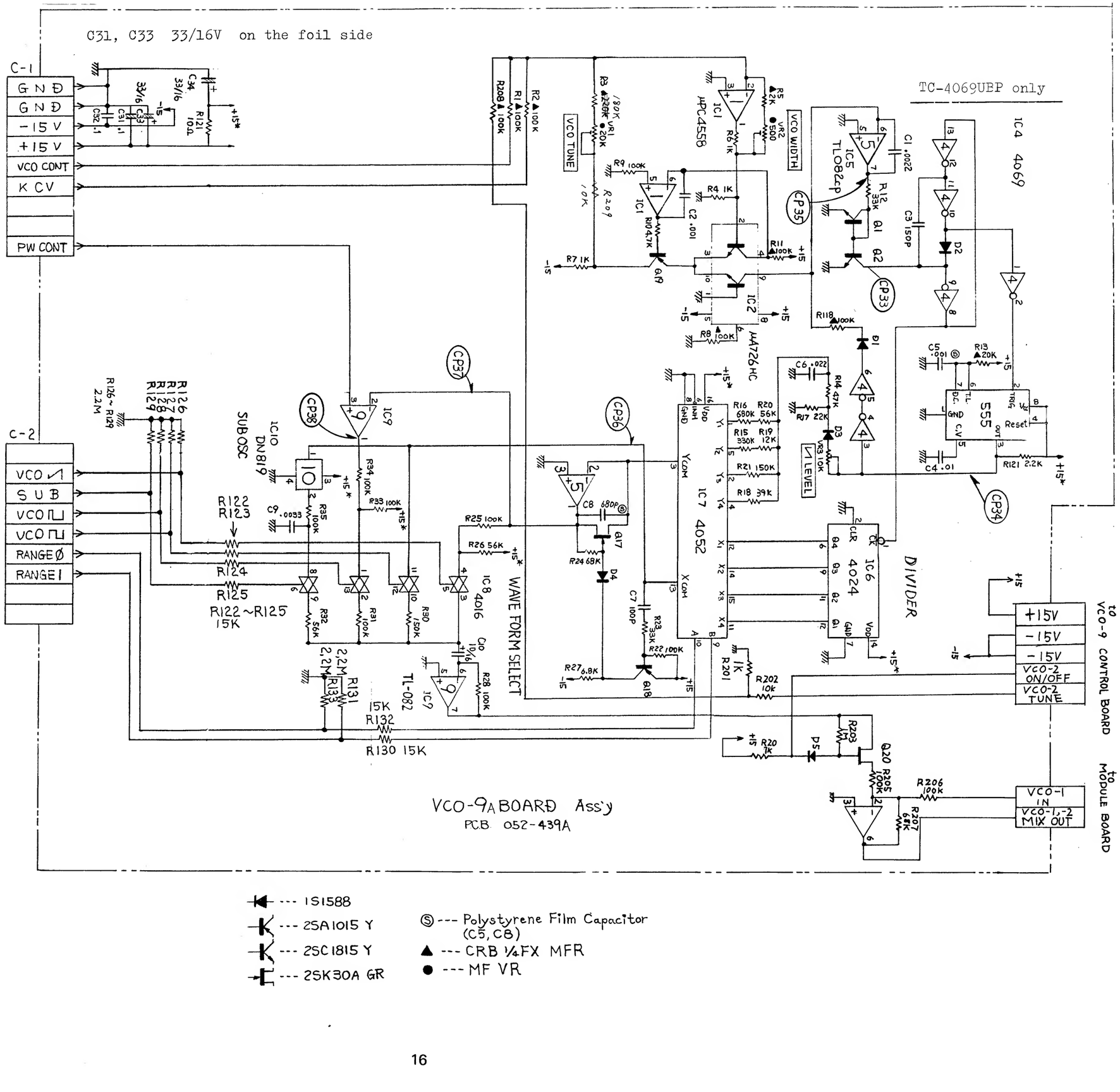

--- 1S1588
--- 2SA1015 Y
--- 2SC1815 Y
--- 2SK30A GR

Ⓢ --- Polystyrene Film Capacitor (C5, C8)
▲ --- CRB 1/4FX MFR
● --- MF VR

KCV BOARD

CV-3B (152-003B) (PCB 052-440B)
S/N 850730 and higher

CV-3A (152-003A) (PCB 052-440A)
S/N up to 850729

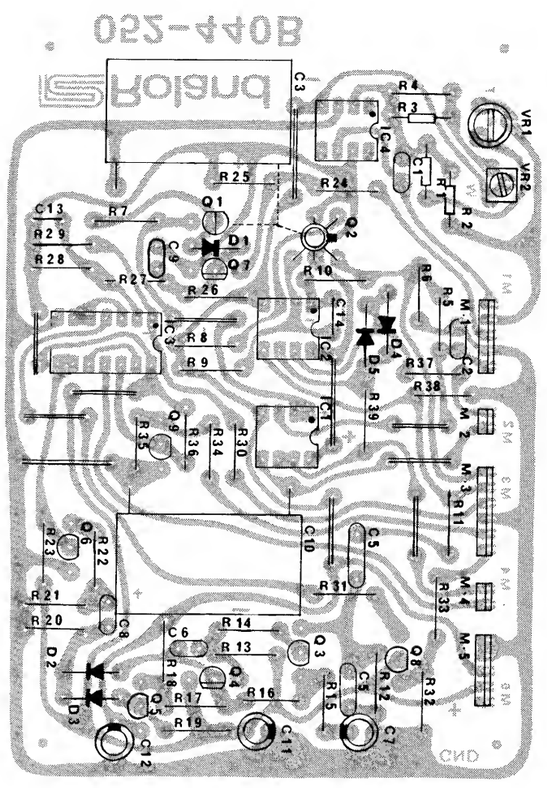

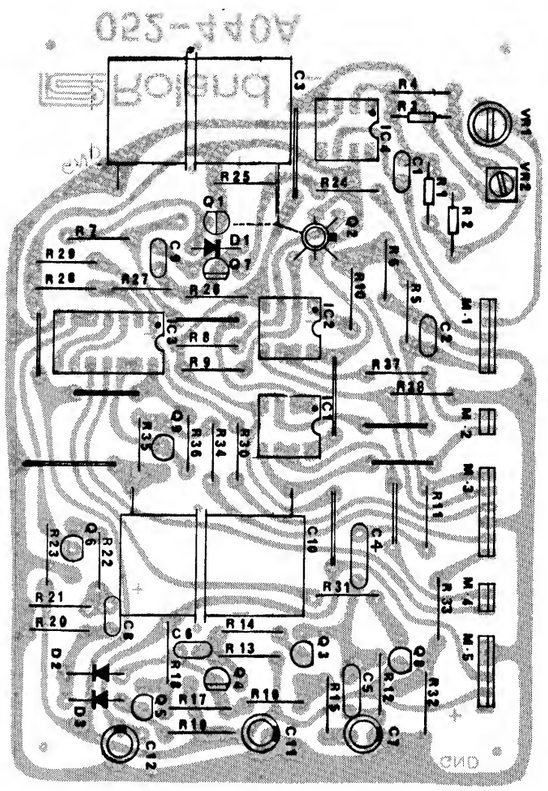

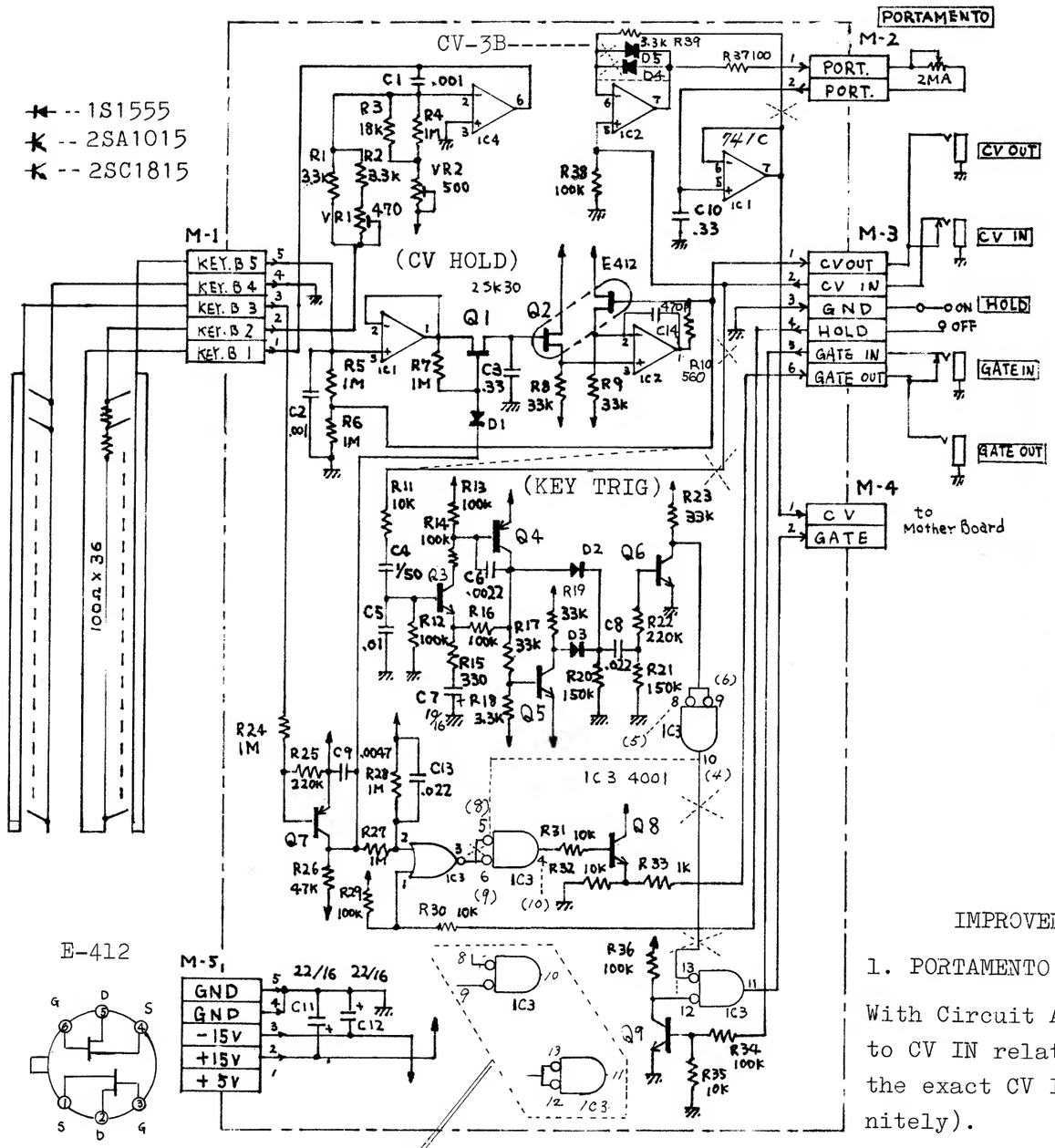

Dotted lines ------ and paranthesises with numbers show original CV-3A circuit arrange.

IMPROVEMENTS on CV-3

1. PORTAMENTO (with serial number 850370 -- CV-3B)

With Circuit A in the figure right, C charges close to CV IN relatively fast, but will not charge up to the exact CV IN for a while (theoretically, indefinitely).

Circuit B

One of the diodes keeps IC2 output 0.6V higher(in the case figure immediately right) or lower than CV IN and C10 charging (discharging) rate is speeded up along curve B. Once voltage across C10 reaches the CV IN, feedback resistor 3.3K will cause the circuit maintain the CV.

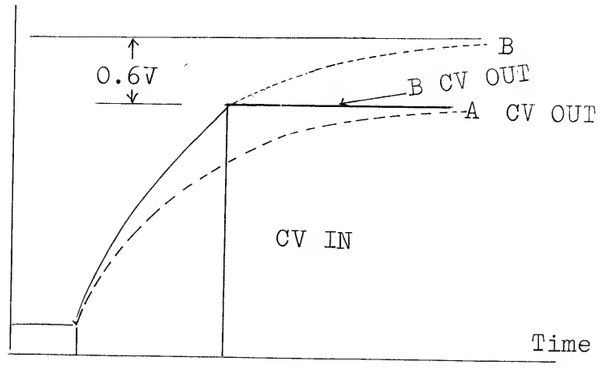

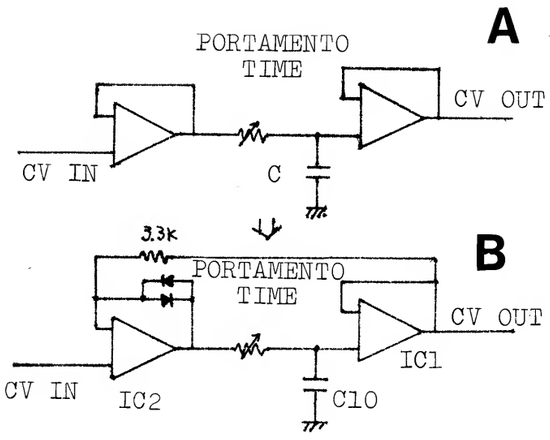

Improvements on CV-3 cont'd

2. Shifting TRIG. GEN. - CV-3A only

This relieves the following:

When keys on MRS-2 are played in legato with the CV and GATE IN/OUT jacks being connected to a CSQ-100, tones corresponding to the subsequent keys can fade away along with the first key's envelope decay(a remarkable example is Preset PIANO).

This is because Gate-retrigger pulse, being blocked with CSQ-100 circuits, does not exist at GATE IN, failling to re-set envelope generator for individual keying that follows to the first keying in sequence.

After modification, MRS-2 has no detrimental effects on sequencers other than CSQ-100.

The modification was conducted on MRS-2 with serial number 840630; besides, products bearing the following numbers have been modified before shipment.

830568-830599	830600-830617
810260-810279	830528-830529
830533-830534	830540-830545
830547-830548	830556-830557
830552.830554	830619.830621

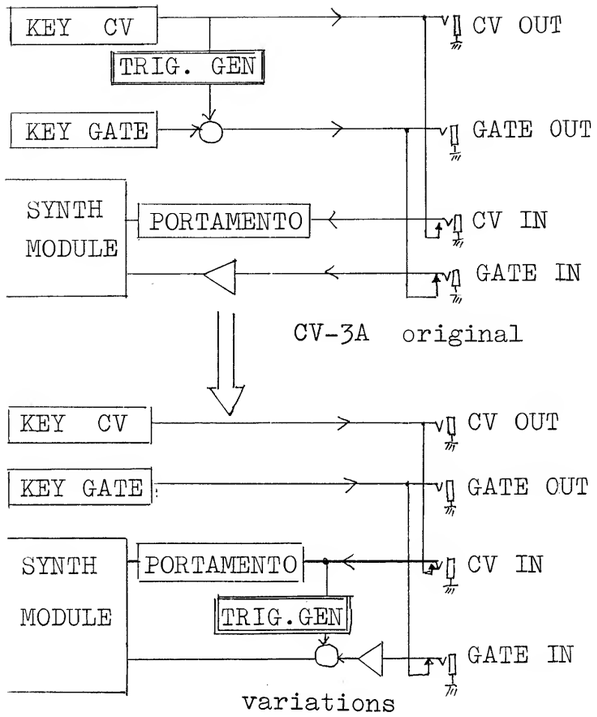

modification on PCB

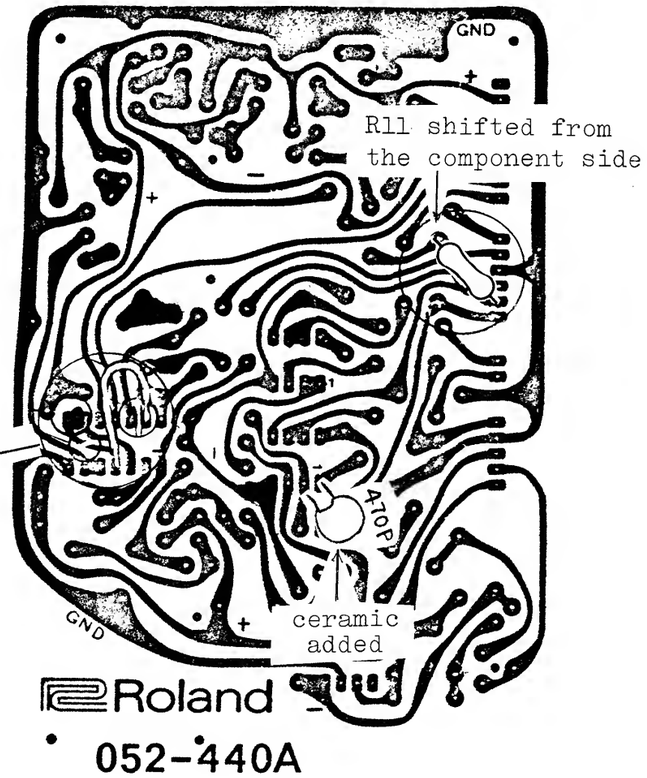

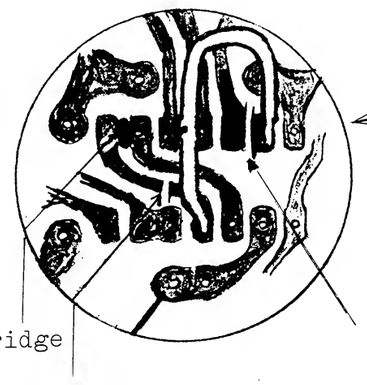

foil scraped off

MODULE CONTROL OP-106C (149-106C)

(PCB 052-235C)

Moving the A, D or R sliders from bottom to top will increase the frequency by approximately 1000.

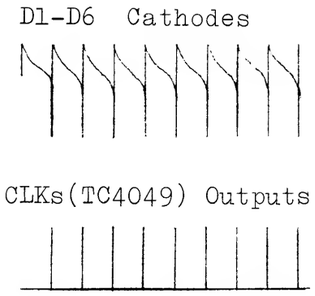

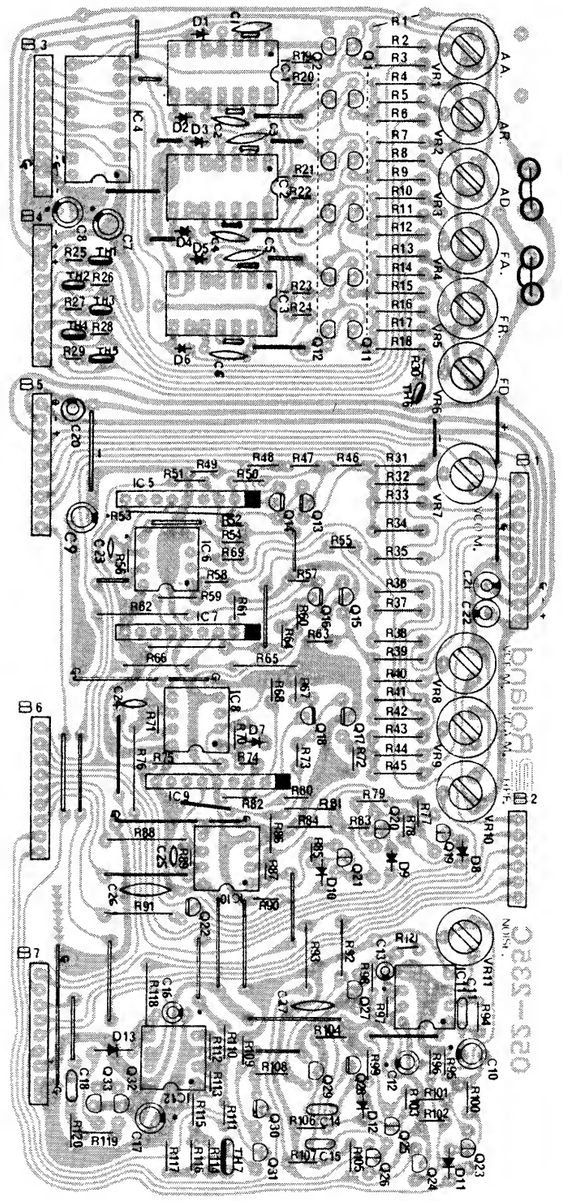

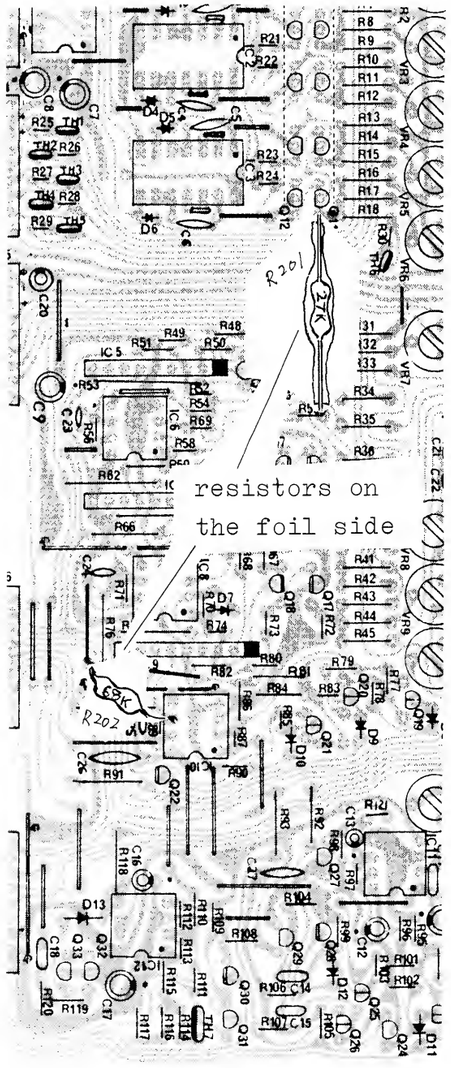

MODULE CONTROL BOARD Ass'y OP-106

PCB 052-235

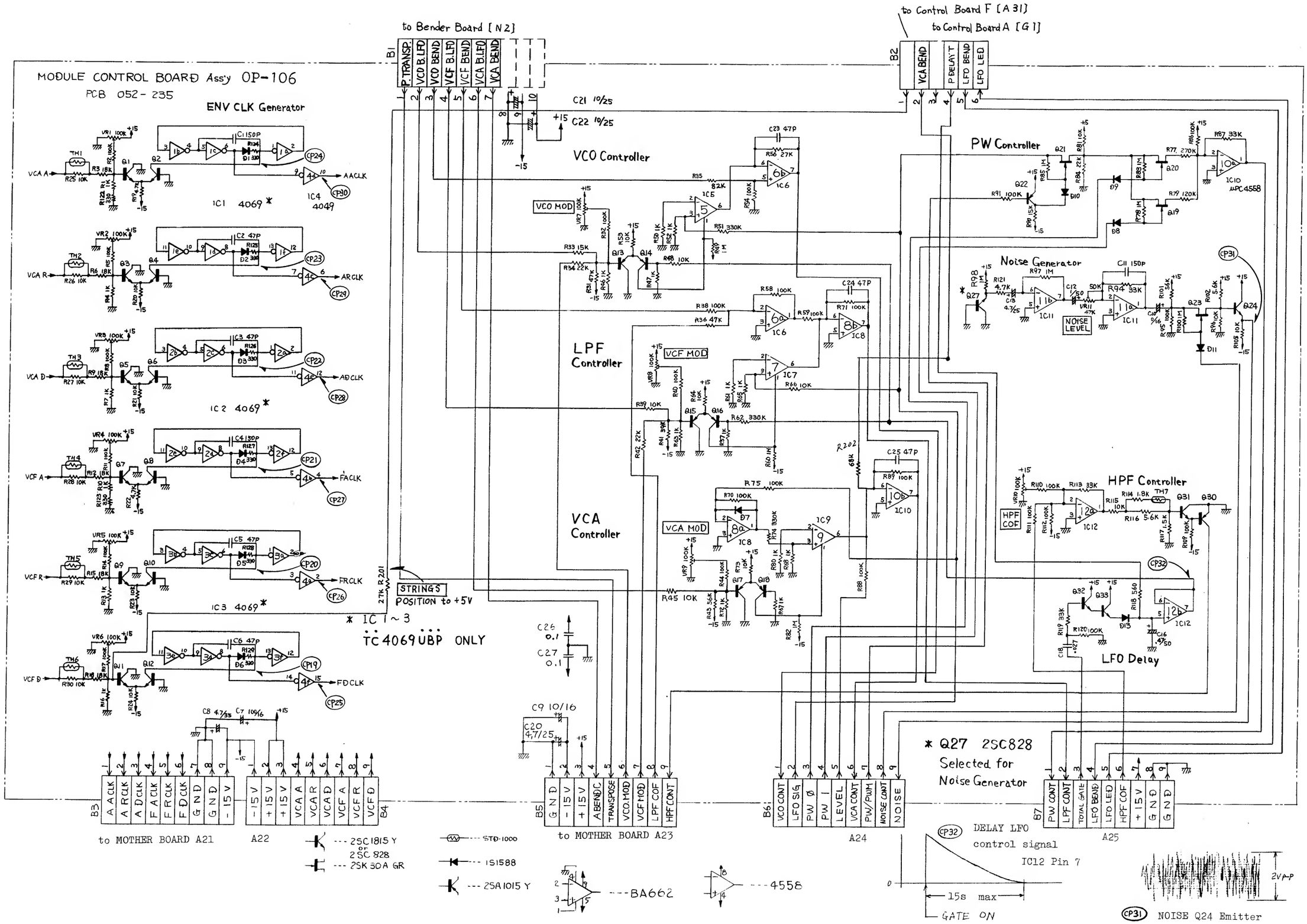

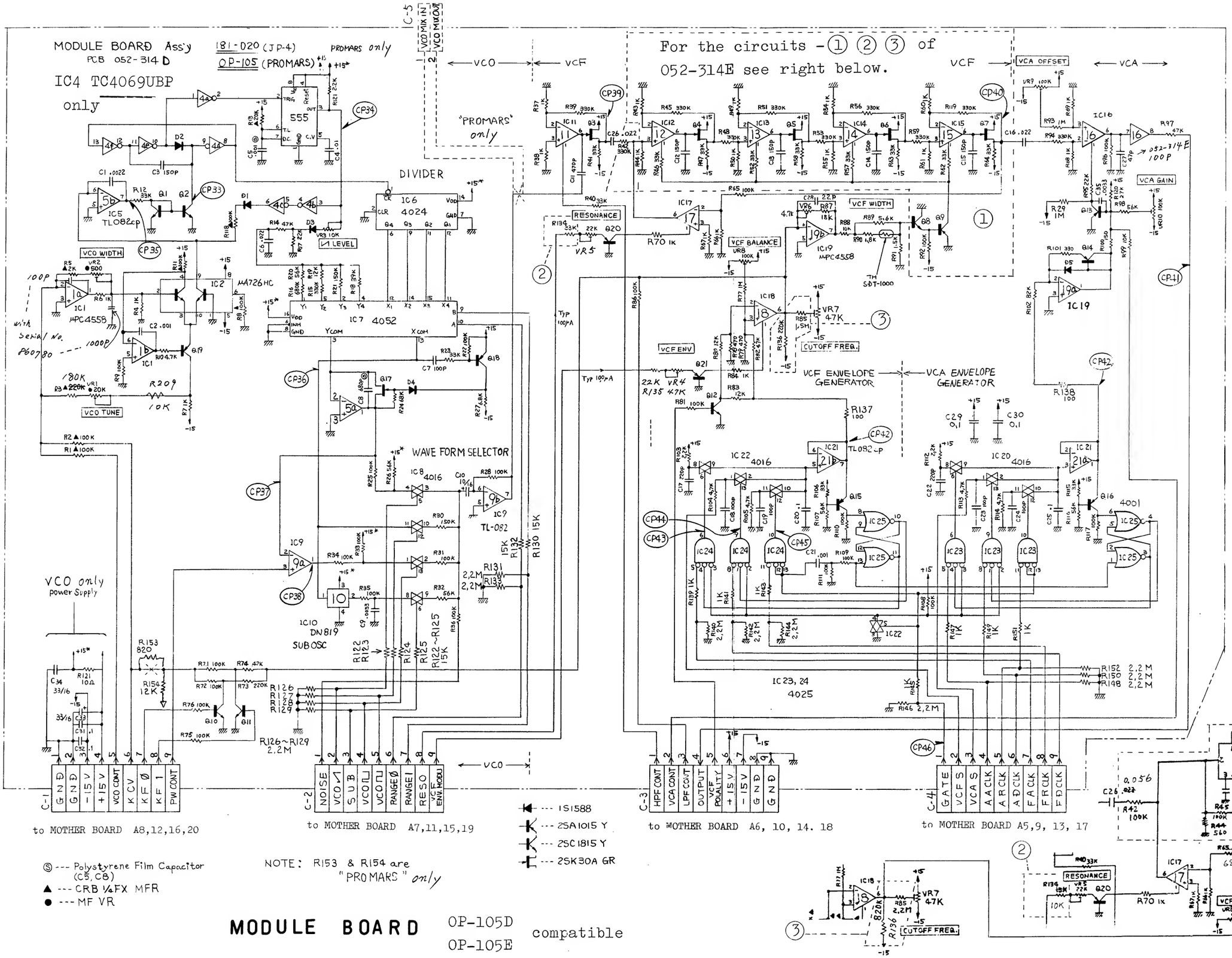

MC1455P

P1 SUFFIX
PLASTIC PACKAGE
CASE 626
(Top View)
(MC1455P1 only)

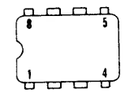

1. Ground
2. Trigger
3. Output
4. Reset
5. Control Voltage
6. Threshold
7. Discharge
8. Vcc

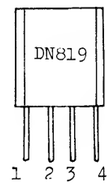

(TOP VIEW)

μA726H

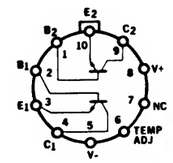

Capacitors on the foil side: (OP-104D) C33, C34, C35 and 100p, 1000p connect to IC1.

OP-105E

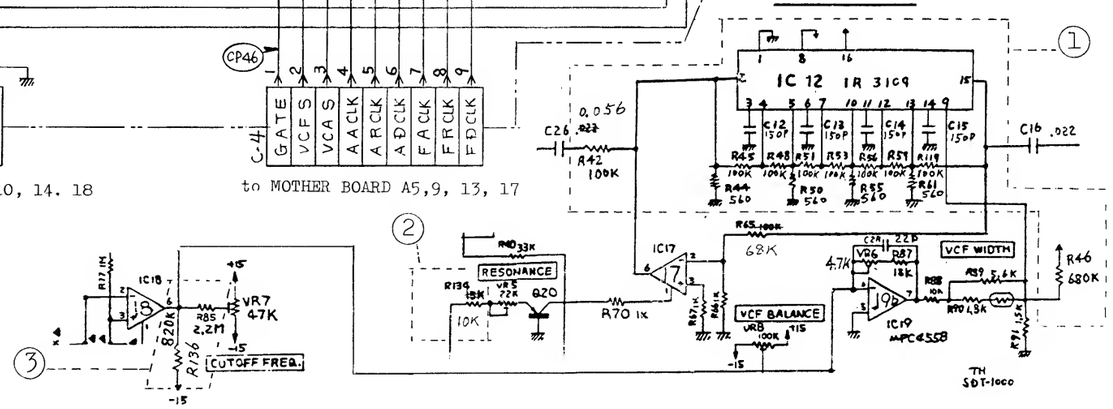

MODULE BOARD

BA662

Besides BA662 -A and -B, there are factory selected marked with various colors. Although they are interchangeable,however,because of electrical characteristic differences,use only in complete set of the same color.

For non-selected: BA662A is a good replacement for BA662B while BA662B cannot replace for BA662A.

OP-105D (149-105D)
(PCB 052-314D)

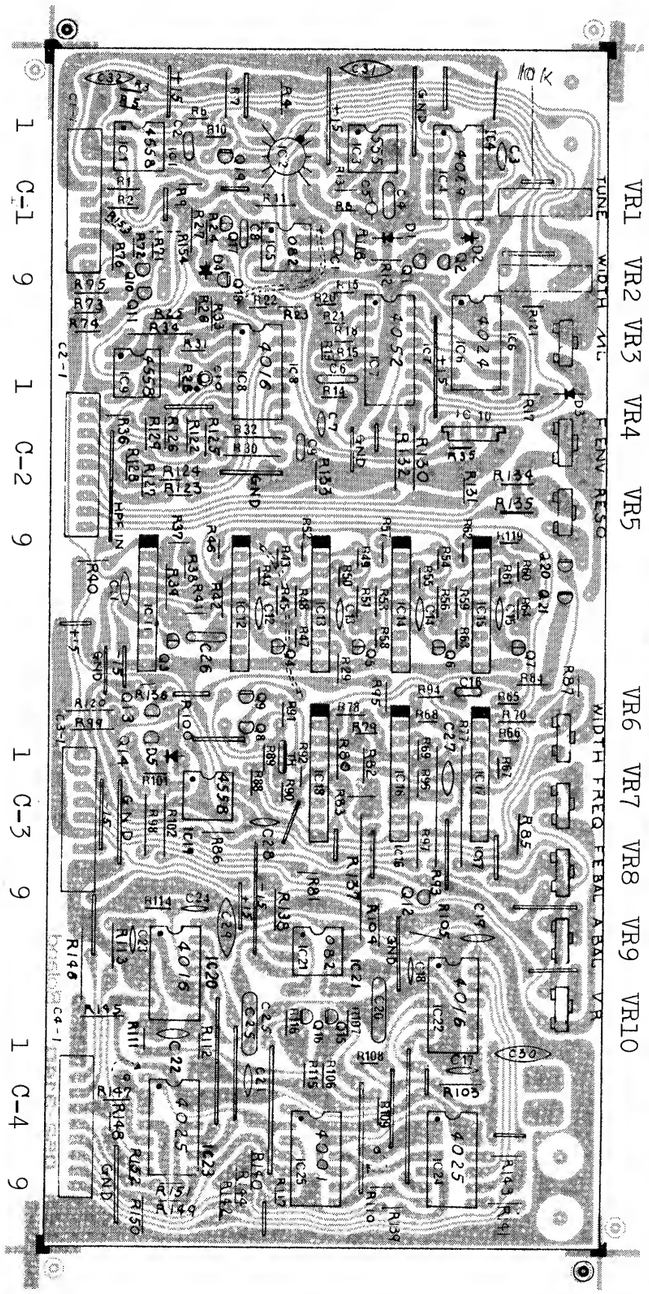

OP-105E (149-105E)
(PCB 052-314E)

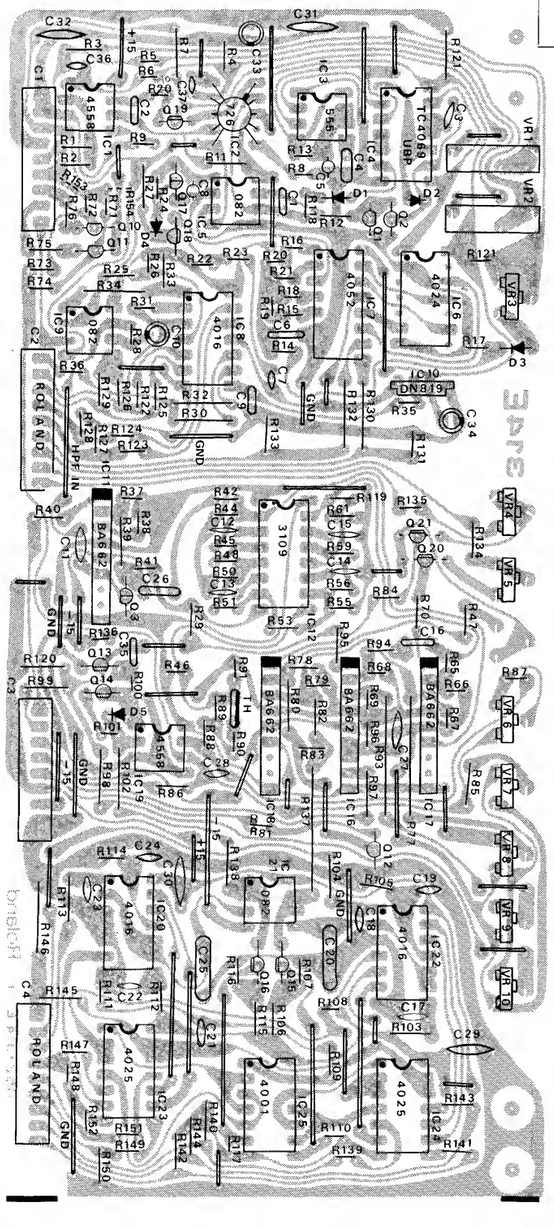

POWER SUPPLY BOARD

PS-52F(146-052F) 100V
PS-53F(146-053F) 117V
PS-54F(146-054F) 220/240V

(PCB 052-327F)

FUSES

AC	F1-F3	F4
100/117V	SGA0002(2A) (008-028)	SGA0001(1A) (008-026)
220/240V	CEE T2A (008-070)	CEE T500mA (008-063)

Q1,Q2 2SA1015-Y
Q3 2SB596-Y or 2SB434-O
Q4 2SD880-GR or 2SD234-Y

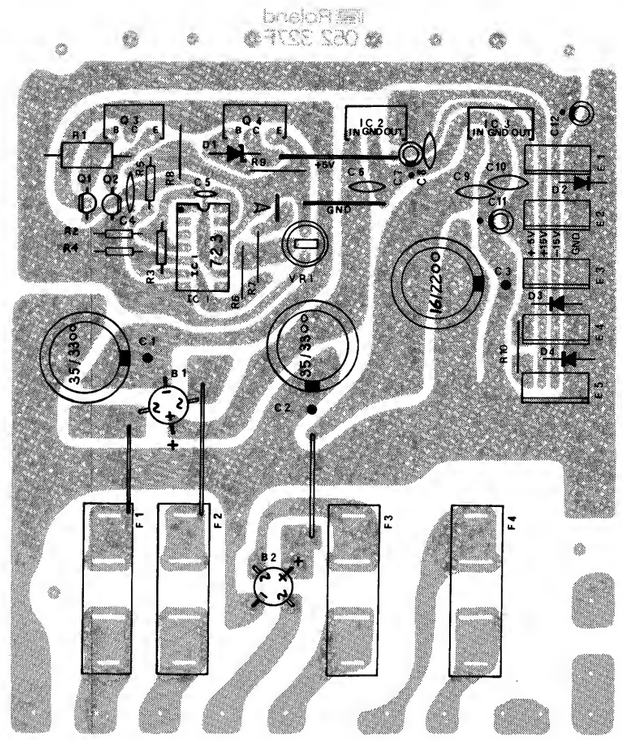

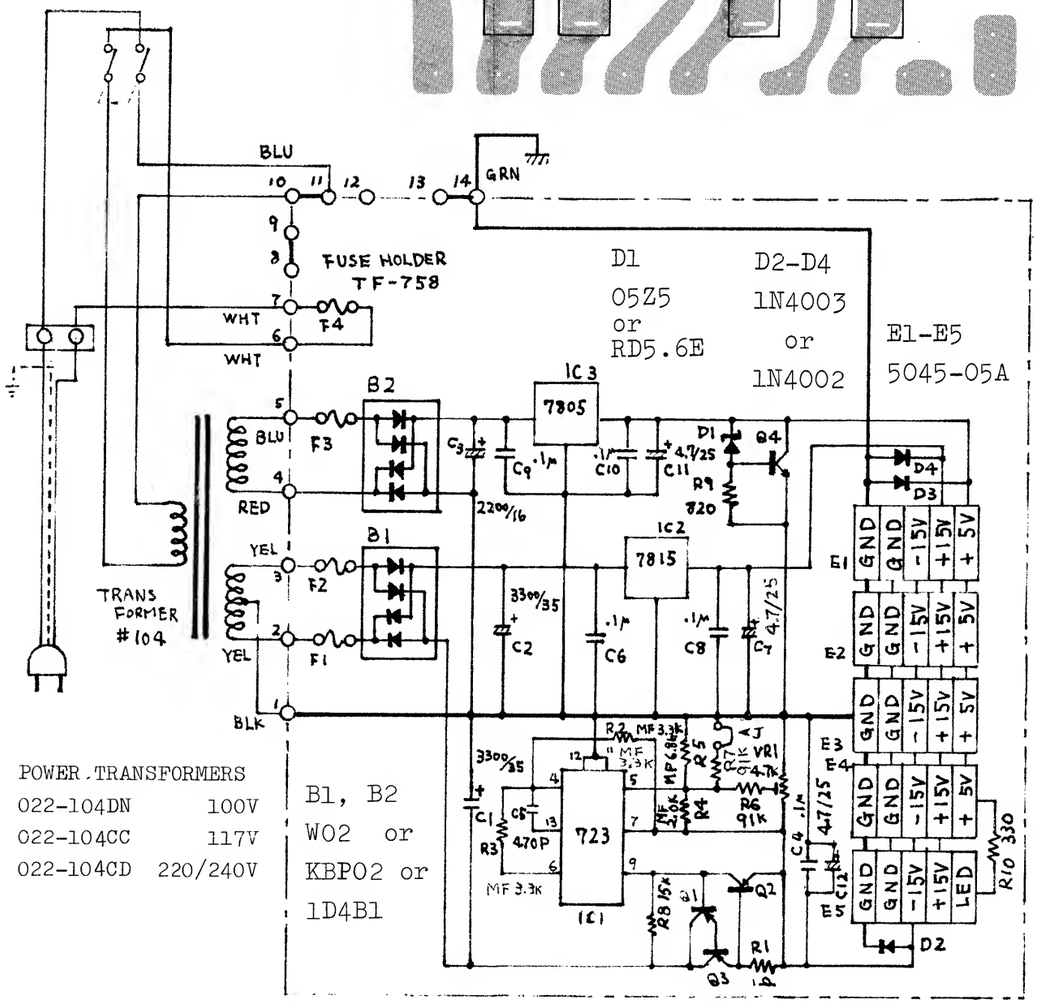

POWER TRANSFORMERS

022-104DN	100V
022-104CC	117V
022-104CD	220/240V

B1, B2
W02 or
KBP02 or
1D4B1

ADJUSTMENT

Because certain circuits of PROMARS are voltage controlled, Power Supply Board, PS-52/53/54 is the first to be checked and adjusted. Also repairing or replacing PS-** Board forces readjustment of some associated PCBs, CV-3, OP-104, VCO-9 and OP-105.
Replacing a PCB other than Power Supply Board involves readjustment of its own.

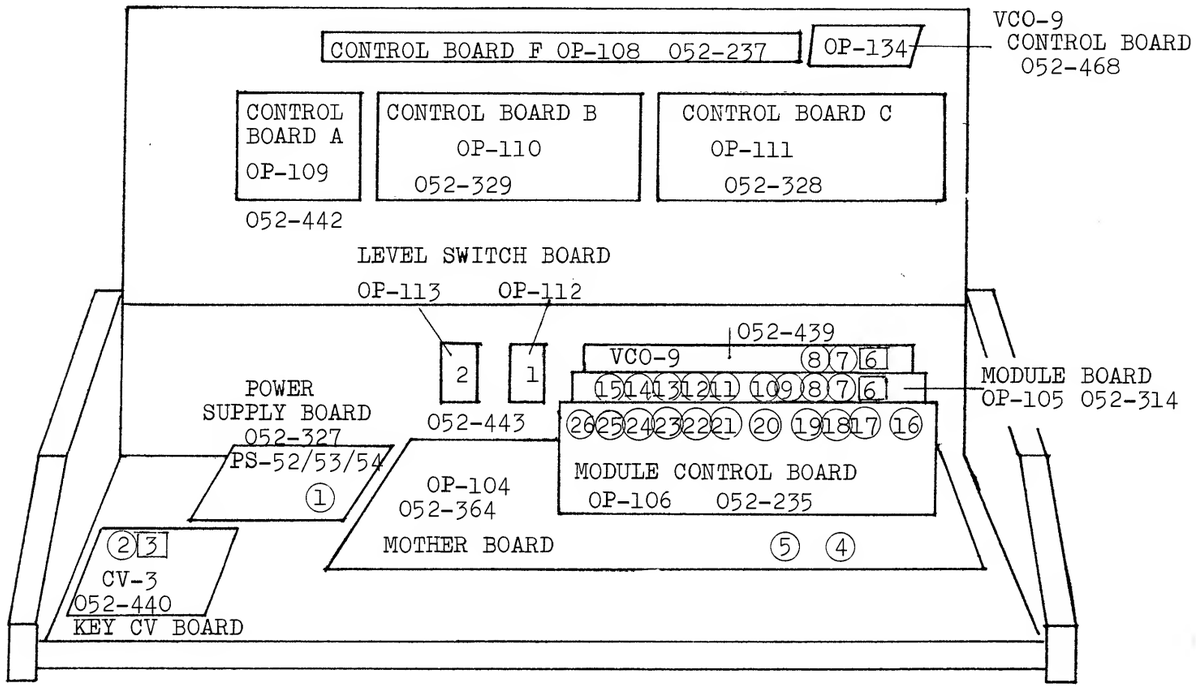

Numbers, ①, ②, [3], etc. in above figure show adjusting trimmer potentiometers and are independent of designations in individual circuit diagram.
In this adjustment, trimmer pots are abbreviated as "P-xx".

1. DC VOLTAGE (–15 Volt)

Allow at least five minutes for warmup.

1. Connect a digital voltmeter to TP-1.
2. Adjust P-1 for -15.0±10mV.
3. Check other voltages, they must be

   +5.0±250mV and +15.0±750mV.

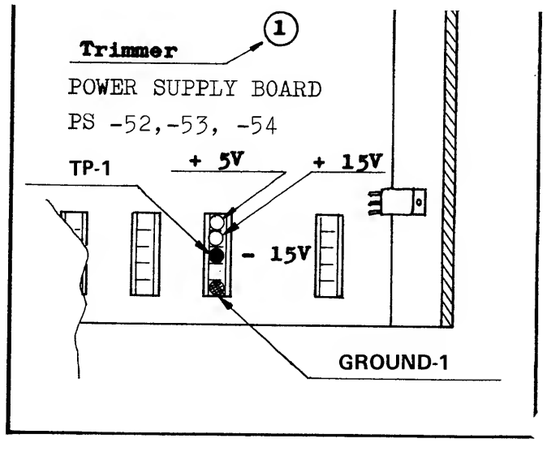

2. KEY CV and WIDTH

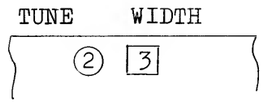

Connect digital voltmeter to the hot terminal on CV OUTPUT jack.

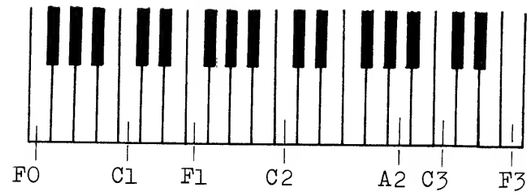

1. While depressing C1 and C2 keys alternately, adjust P-3 so that C2V =C1V + 1.00V±3mV.
2. Hold down C1 key and adjust P-2 to provide 2.00±2mV.
3. Check octave keys for errors:
   C2 = 3.00±3mV C3 = 4.00±3mV

3. LFO WAVEFORM

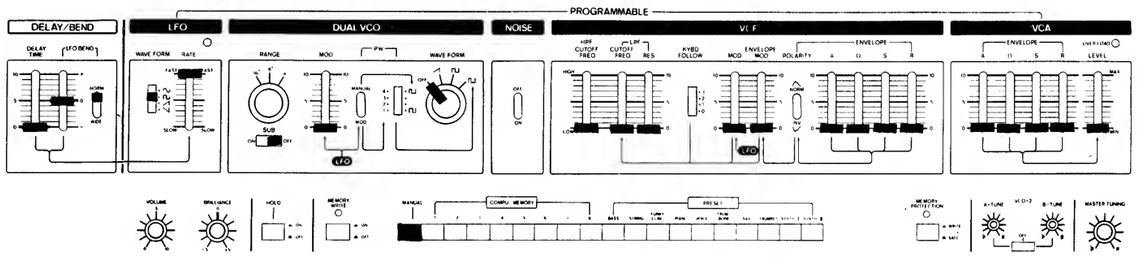

Connect oscilloscope to TP-4 on Mother Board OP-104(see next page).
1. Adjust P-4 for slope straightness.

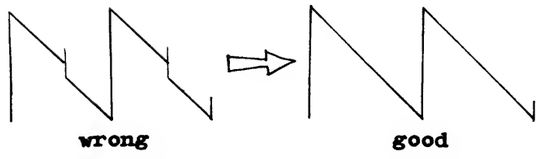

4. LFO RATE

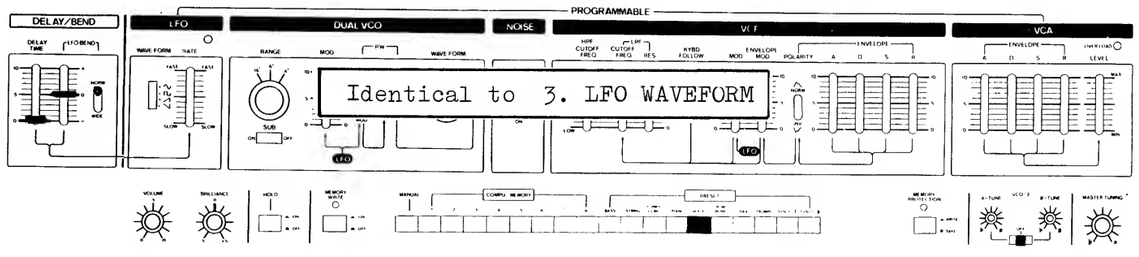

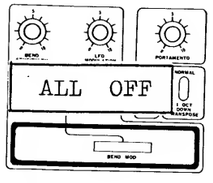

Connect scope to TP-5 on OP-104.
1. Set P-5 for 5Hz.

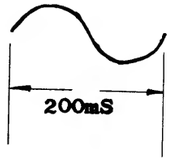

5. VCO FREQUENCY and WIDTH

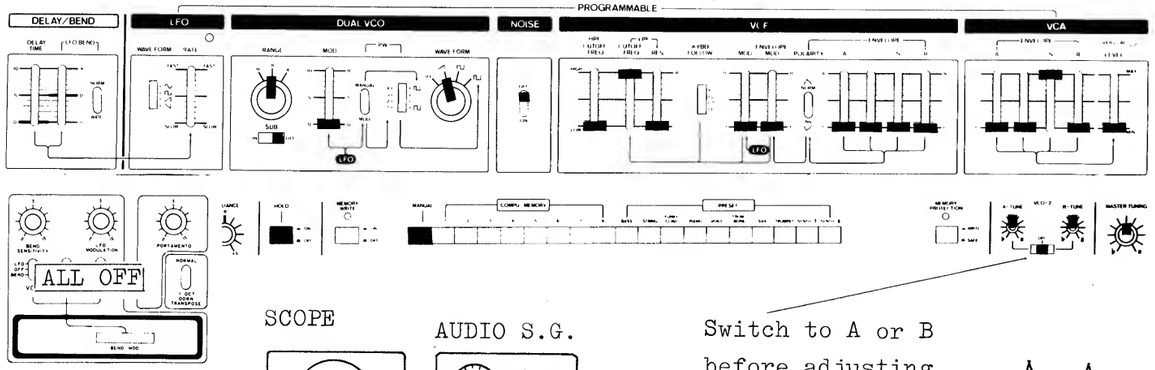

SCOPE

AUDIO S.G.

442Hz

to OP-104 TP-3

Connect and set instruments as above.

Switch to A or B before adjusting VCO-9 Board.

A2 key

A0 key

MODULE BOARD OP-105

1.While depressing A2 key, Adjust P-7 for 1:2 Lissajous figure.

2.While depressing A0 key, adjust P-6 for 2:1 Lissajous figure.

VCO-9

To disconnect VCO-1 signal path:
Pull the housing off the PCB.
Reverse it and plug in the right pin only.

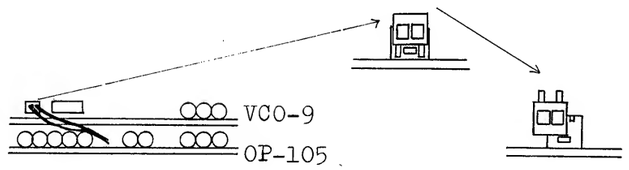

Set VCO-2 TUNE switch to A-TUNE or B-TUNE.

Adjust P-6 and P-7 on VCO-9 Board following the steps in OP-105.

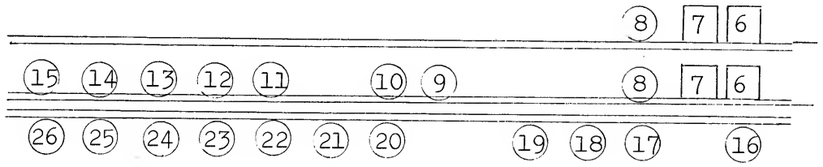

VCO-9

MODULE BOARD OP-105

MODULE CON/B OP-106

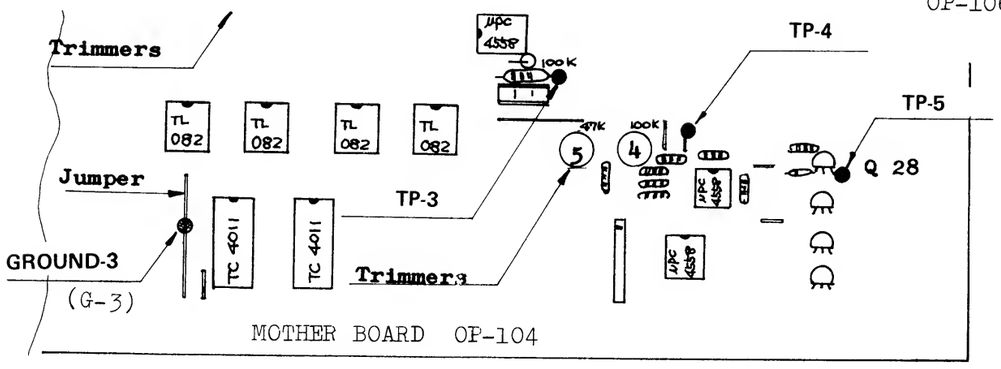

6. VCO WAVEFORM (Pulse width 50%)

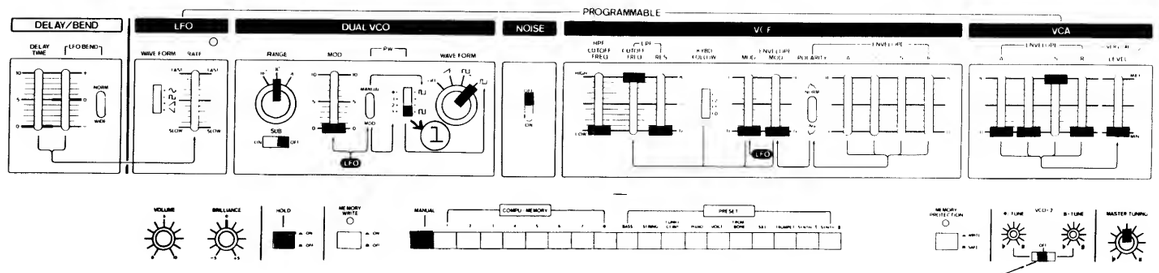

Test Point - TP-3 on OP-104

OP-105 VCO-9 Set P-8's respectively for 50% duty ratio with C1 key holding down.

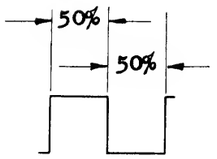

Place at A or B and disconnect VCO-1 signal (see section 5) during VCO-9 adjustment.

7. VCF FREQUENCY and WIDTH

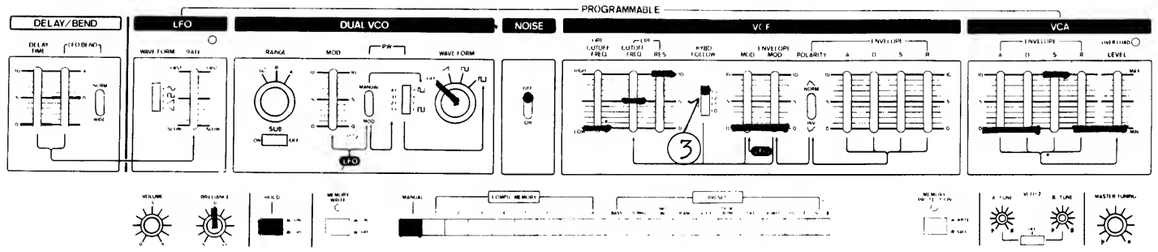

NOTE: Due to the digital control characteristics of this VCF, if CUTOFF FREQ knob is moved steadily and slowly, the resonating VCF will produce frequencies in a series of steps. If CUTOFF FREQ is set at a point exactly between two of these steps, the resulting frequency will be unstable as it jumps up and down between these two steps. The knob must be set at a point near "5" where VCF output frequency locks positively on one frequency or the other.

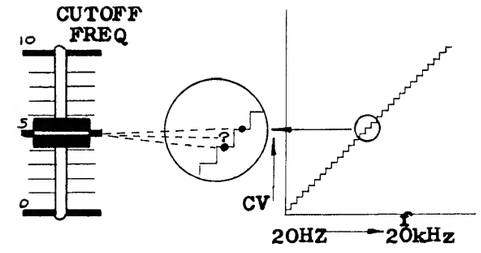

Test Point - TP-3 on OP-104

1. While depressing F1 and F2 keys alternately, adjust P-11 on OP-105 to display two figures of 2:1 period.

Reset KEY FOLLOW at "0".

2. Adjust P-12 on OP-15 for 880Hz. (by displaying Lissajous figure,etc.)
3. Check F1,F2 keys for deviations in step 1.

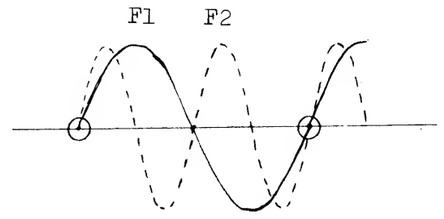

8. VCF RESONANCE

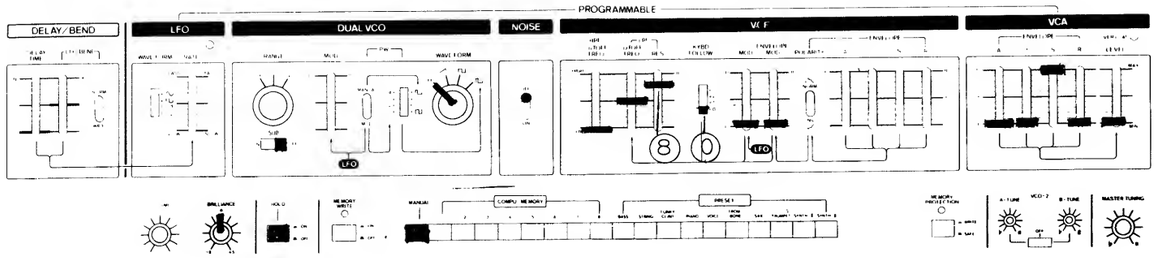

Test Point - TP-3 on OP-104

1. While depressing a key, adjust P-10 on OP-105 so that VCF just begings oscillation.
   Approx. 800mVpp sine with RESONANCE set at "8".

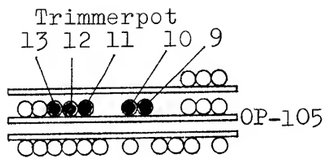

9. VCF ENVELOPE BALANCE

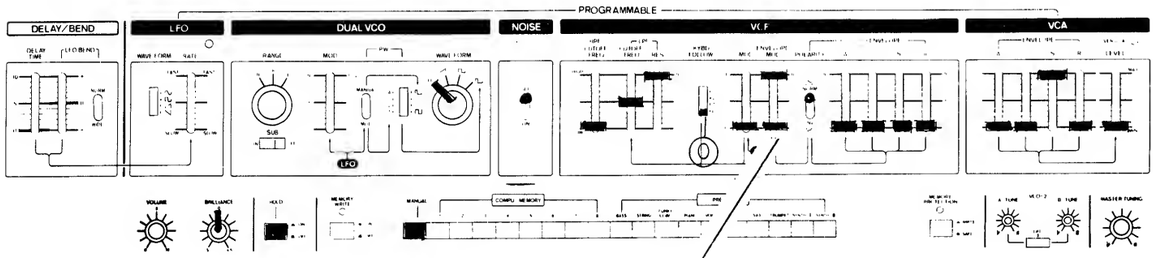

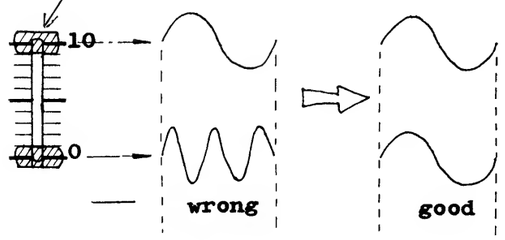

Test Point - TP-3 on OP-104

1. Adjust P-13 on OP-105 so that moving ENVELOPE MOD between "0" and "10" produces no frequency change.

10. VCF ENVELOPE MODULATION DEPTH

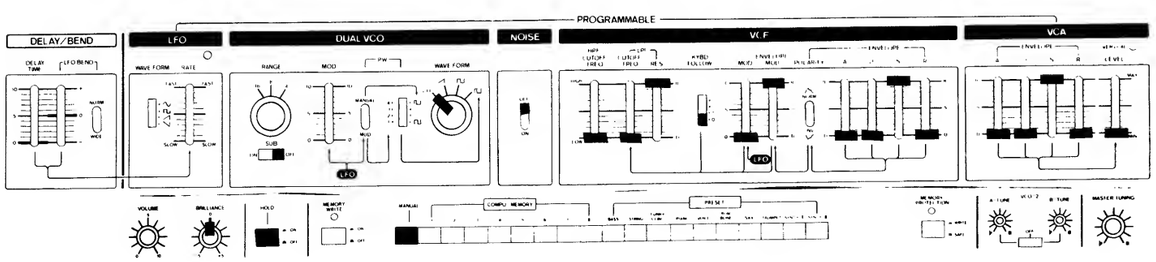

Test Point - TP-3 on OP-104

1. With one key holding down, set P-9 on OP-105 for 12K±1KHz.

11. VCA BALANCE

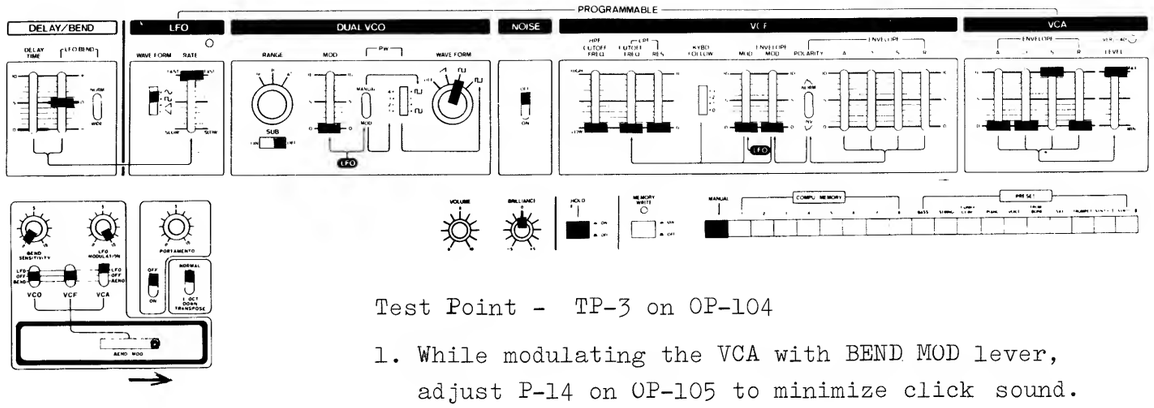

Test Point - TP-3 on OP-104

1. While modulating the VCA with BEND MOD lever, adjust P-14 on OP-105 to minimize click sound.

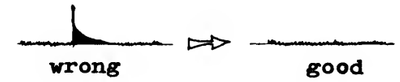

12. VCA LEVEL

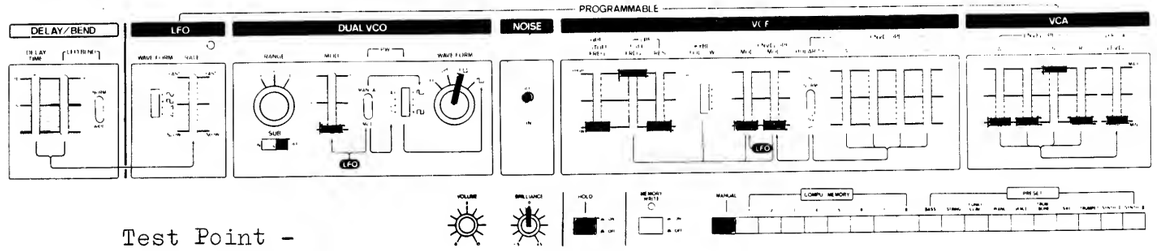

Test Point -
TP-3 on OP-104

1. While depressing down C2 key adjust P-15 on OP-105 for:

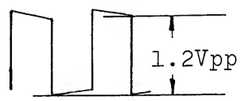

13. LFO VCO MODULATION

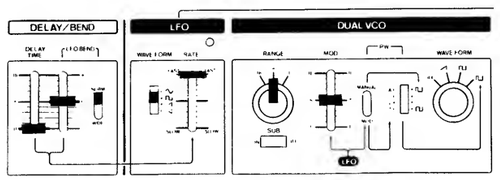

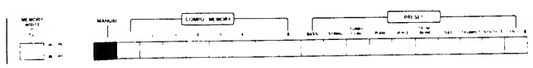

Test Point - TP-10 on OP-106
Connect scope ground to G-3 on OP-104

1. Set P-20 on OP-106 for 150mVpp ±10%.

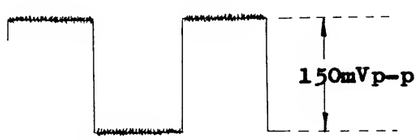

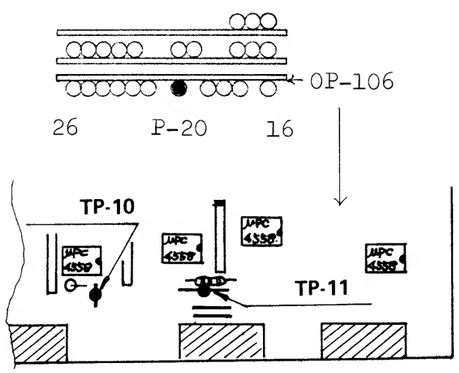

14. LFO VCF MODULATION

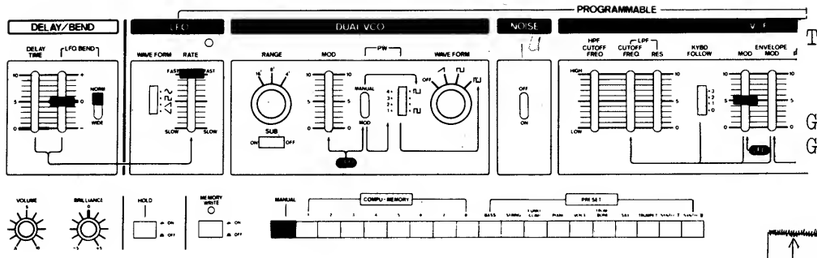

Test Point - TP-11 on OP-106 (see section 20)

Grounding Point - Ground 3(G-3) on OP-104

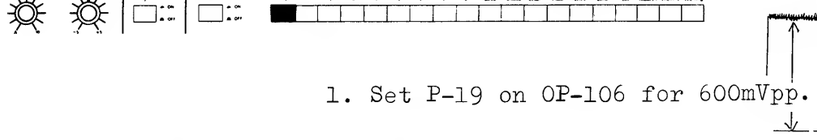

1. Set P-19 on OP-106 for 600mVpp.

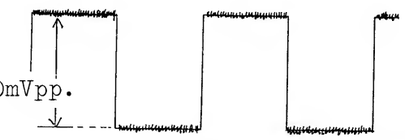

15. LFO VCA MODULATION

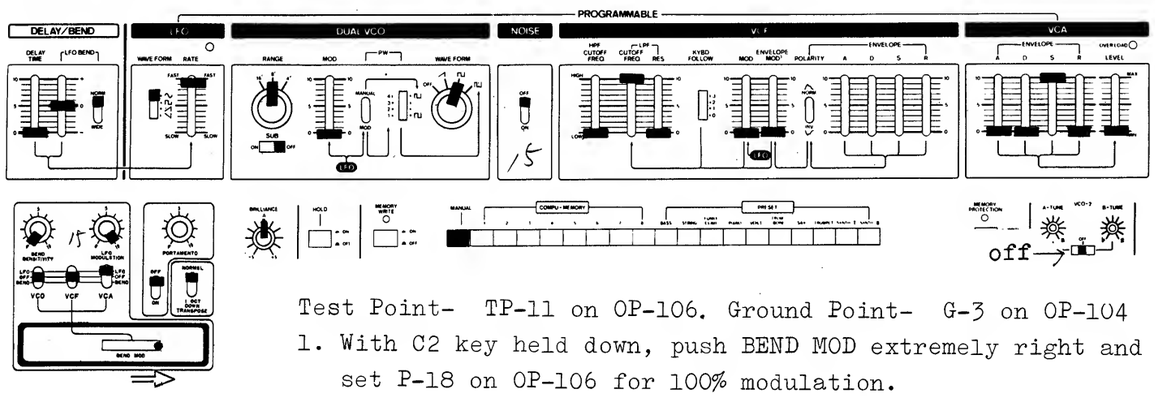

Test Point- TP-11 on OP-106. Ground Point- G-3 on OP-104

1. With C2 key held down, push BEND MOD extremely right and set P-18 on OP-106 for 100% modulation.

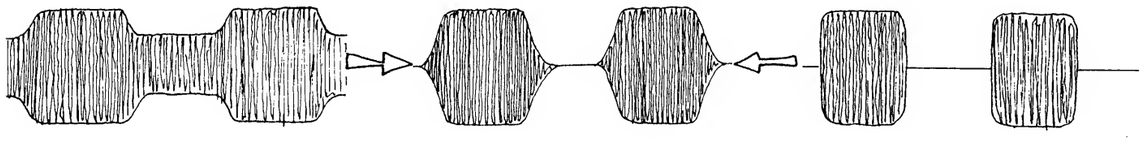

16. VCF ENVELOPE ATTACK

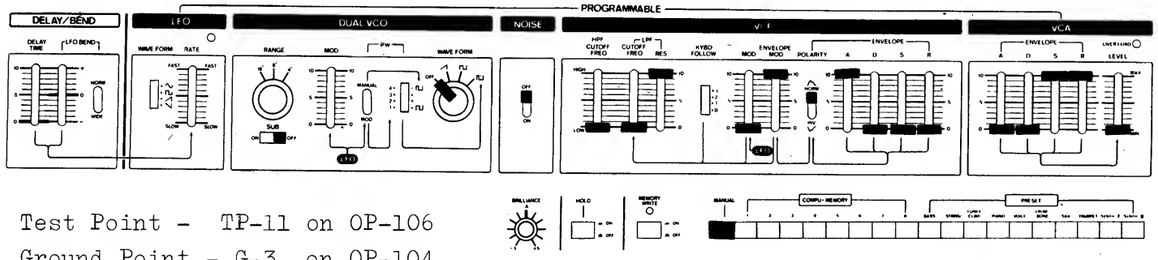

Test Point - TP-11 on OP-106
Ground Point - G-3 on OP-104

Attack Time is defined as the time from a keying to a sudden frequency drop.

1. Depress C2 key and adjust P-23 on OP-106 so that Attack time becomes 3 sec.

Measuring Attack time by listening to the sound is easier than observing the screen.

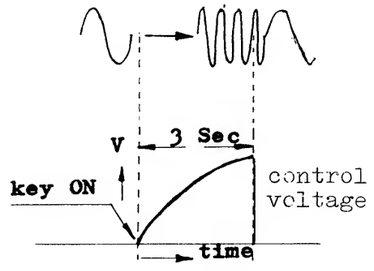

17. VCF ENVELOPE DECAY

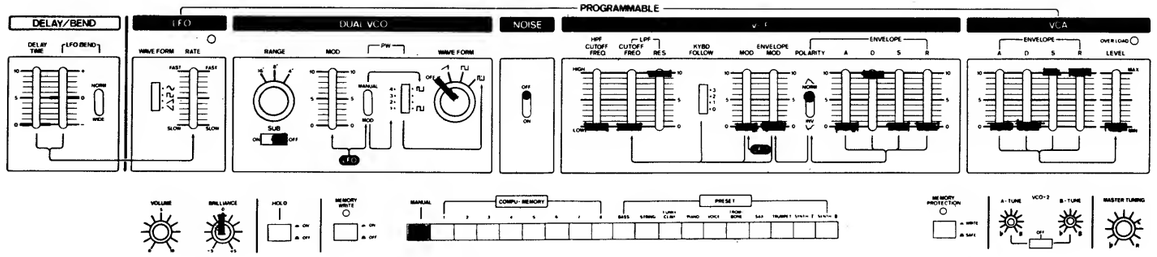

Test Point - TP-11 on OP-106
Grounding Point - G-3 on OP-104

1. Adjust P-21 on OP-106 so that frequency lowers to 1/10 of its initial value in 4 sec after depressing C2 key.

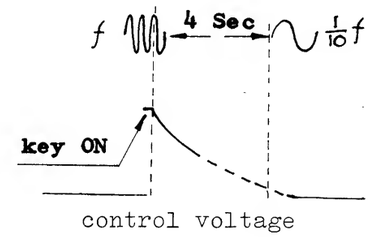

18. VCF ENVELOPE RELEASE

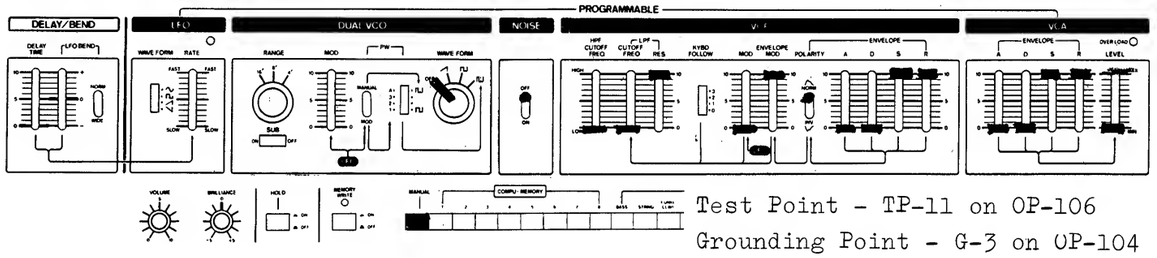

Test Point - TP-11 on OP-106
Grounding Point - G-3 on OP-104

1. Adjust P-22 on OP-106 so that frequency lowers to 1/10 of its initial value in 4 sec after C2 key is released.

The amplitude decreases as its frequency lowering. Increase scope vertical sensitivity accordingly.

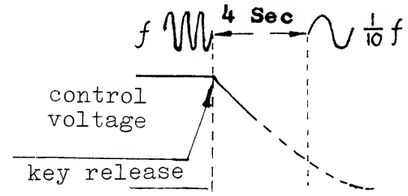

19. VCA ENVELOPE ATTACK

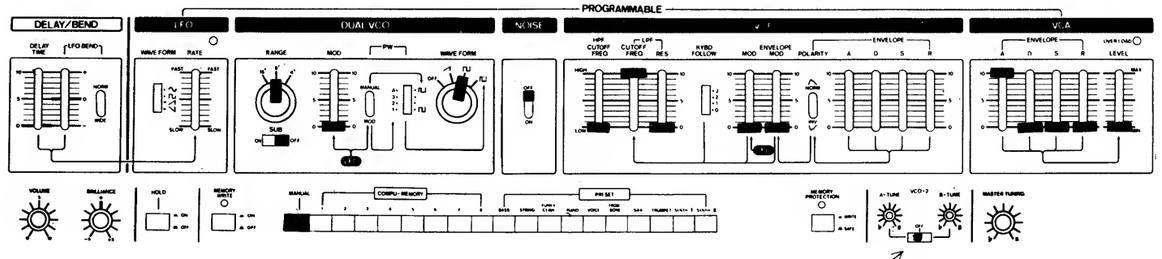

Test Point - TP-11 on OP-106
Grounding Point - G-3 on OP-104

1. Adjust P-26 on OP-106 so that Attack Time is 3 sec with C2 key on.

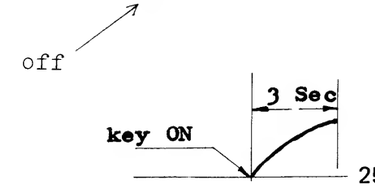

20. VCA ENVELOPE DECAY

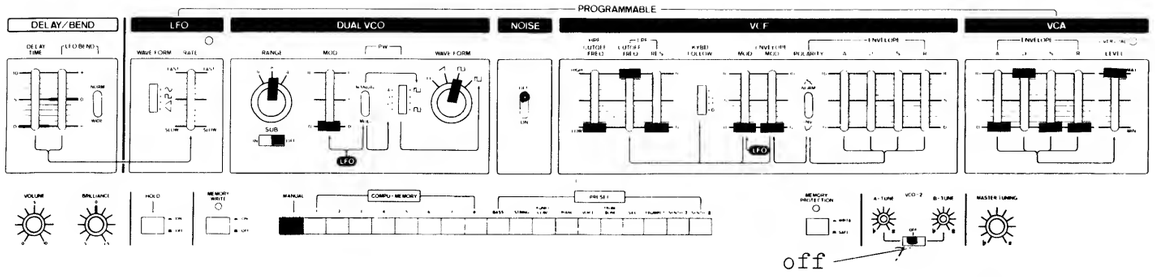

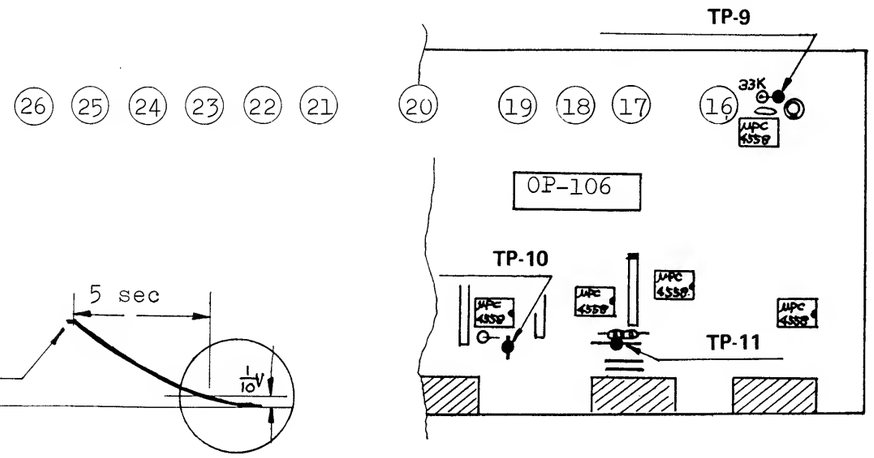

Test Point - TP-11 on OP-106
Grounding Point - G-3 on OP-104

1. Adjust P-24 on OP-106 so that amplitude decreases to 1/10 in 5 sec after pressing C2 key.

21. VCA ENVELOPE RELEASE

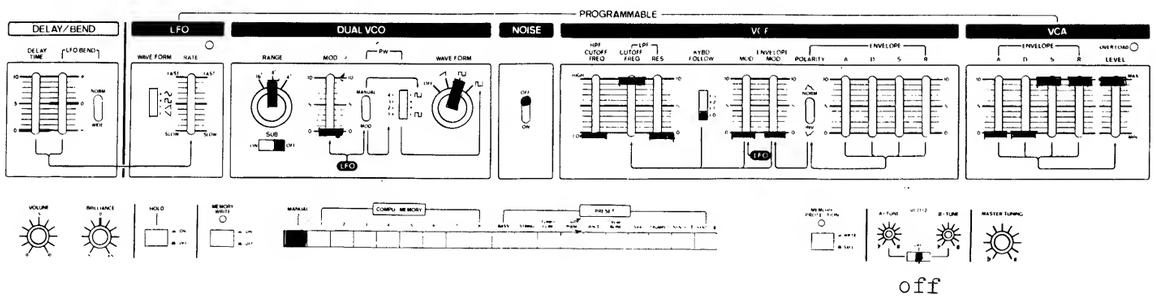

Test Point - TP-11 on OP-106
Grounding Point - G-3 on OP-104

1. Adjust P-25 on OP-106 so that amplitude decreases to 1/10 in 5 sec after releasing C2 key.

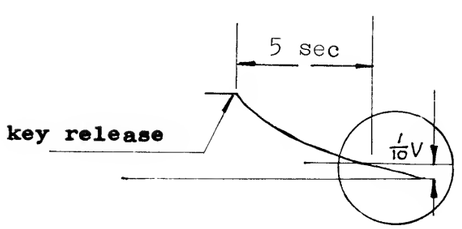

22. HPF CUTOFF FREQUENCY

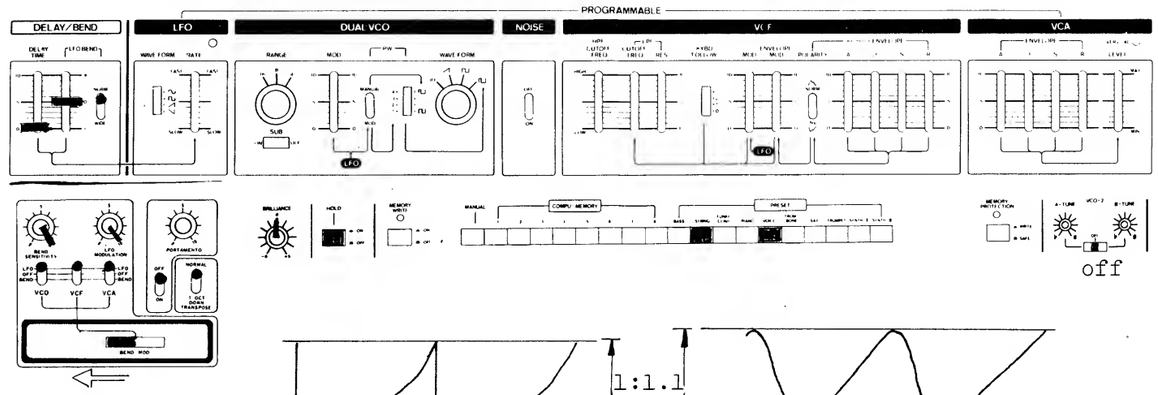

Test Point - TP-11 on OP-106
Grounding Point - G-3 on OP-104

1. While pushing BEND MOD lever extremely left, adjust P-17 on OP-106 so that sound ratio of STRING and VOICE becomes 1:1.1 in amplitude.

23. NOISE LEVEL

Test Point - TP-9 on OP-106
Grounding Point - G-3 on OP-104

1. Adjust P-16 on OP-106 for 5Vpp.

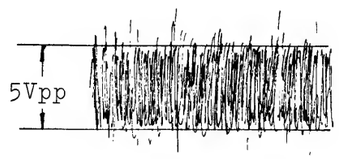

PARTS LIST

061-242E	Chassis (case) no.242E	
072-265D	Panel (top) no.265D	
072-268B	Panel (bender) no.268B	
083-069B	Side Panel no.69B	right
083-070B	Side Panel no.70B	left
111-024	Foot (collar) no.24 black	
	BU480 CA25	
115-003	Hinge no.3	
064-219B	Music Rack Holder no.219B	
004-011	Keyboard Assy SK-132G	
091-017A	Endblock no.17A	right
065H52	Blind H52	

KNOB. BUTTON

016-033	Knob no.33	slider
016-056	Knob no.56	rotary small
016-057	Knob no.57	rotary large
016-009	Button no.9	black
016-085	Button no.85	white
016-086	Button no.86	red
016-087	Button no.87	green
016-088	Button no.88	yellow
016-089	Button no.89	blue

SWITCH

Push

001-250	SUF-J2	interlock
001-225	SUF-12	MEMO/WRIT. M PROTCT
001-226	SUF-12A	HOLD
001-215	SDG5P-501-1	power 100V
001-216	SDG5P-501-2	117V
001-217	SDG5P-502	220/240V

Lever

001-237	LBC-42M-18K	PW. NOISE, etc
001-238	LBC-23M-18K	TUNE A/B, PORTA, etc

Slide

001-182	SSB-022	RANGE (SUB on/off)
001-205	SSB-023	
001-271	SSB-02332	LEVEL
001-228	SQPR-2412P	LFO WAVE, PW

Rotary

001-224	SRM-1043K15	VCO WAVEFORM
001-234	SRM-1034K15	VCO RANGE

PCB

149-104B	OP-104B Mother Board (PCB 052-364B)
149-105D	OP-105D Module Board (PCB 052-314D)
or	
149-105E	OP-105E compatible with OP-105D
149-106C	OP-106C Module Control (PCB 052-235C)
149-107B	OP-107B Bender Board (PCB 052-441B)
149-108C	OP-108C Control Board F (PCB 052-237C)
149-109A	OP-109A Control Board A (PCB 052-442A)
149-110D	OP-110D Control Board B (PCB 052-239D)
149-111B	OP-111B Control Board C (PCB 052-328B)
149-112A	OP-112A Level SW Board I (PCB 052-443A)
149-113A	OP-113A Level SW Board II(PCB 052-443A)
149-134A	OP-134A VCO-9 Control Board (PCB 052-468A)
152-003B	CV-3B KCV Board (PCB 052-440B)
152-009A	VCO-9A VCO-2 Board (PCB 052-439A)
146-052F	PS-52F Power Supply Board (PCB 052-327F) 100V
146-053F	PS-53F Power Supply Board (PCB 052-327F) 117V
146-054F	PS-54F Power Supply Board (PCB 052-327F) 220/240V
052H195A	LED Mounting Board power switch
or	
052-307	

JACK

009-002	LJ-039-1-6 or	stereo
009-045	HLJ-0235-01-070	
009-025	HLJ-0102-01-040	

POTENTIOMETER

Rotary

029-022	PB-4 Bender unit assy	
028-756	VM10RB10C K20	2MA
028-762	VM10RB10C K20	50KB
028-992	EVHD0AK15	50KB BRILLIANCE
028-1109	EVHB8AK15	50KA VOLUME
028-1118	EVHB8AK15	50KB M. TUNE
030-951	EVHLWAD25B15	50KB A/B TUNE

Slide

029-355	EVAV17C16B54	50KB
029-370	EVAV17C16C26	2MC
029-426	EVAV23C16B54	50KB

Trimmer

030-469	SR-19R	47KB	horizontal
030-471	SR-19R	100KB	
030-660	SR-29R	4.7KB	erect
030-662	SR-29R	10KB	
030-666	SR-29R	47KB	
030-668	SR-29R	100KB	
030-493	CR-19R	4.7KB	horizontal blue
030-505	CR-19R	470KB	
030-689	89PR	20K	helical
030-688	89PR	500-ohm	helical

RESISTOR

CRB$\frac{1}{4}$FX $\frac{1}{4}$W 1%

044-909	2K	044-846	100K
044-844	6.8K	044-849	180K
044-905	18K	044-926	1M
044-887	20K		

CAPACITOR

035-091	ECQF2334MZ	polypropyrene
035-278	ECQS1681KZ	polystyrene
035-279	ECQS1102KZ	polystyrene

FUSE. FUSEHOLDER

008-026	SGA0001 (1A)	prim.	100/117V
008-063	CEE T500mA	prim.	220/240V
008-028	SGA0002 (2A)	sec.	100/117V
008-070	CEE T2A	sec.	220/240V
012-003	TF-758	clip	

022-104DN	Power transformer	100V
022-104CC	Power transformer	117V
022-104CD	Power transformer	220/240V
022H094	Coil 24M333	

SEMICONDUCTOR

Transistor

017-105	2SA1015-Y	
017-022	2SB434-0	or
017-128	2SB596-Y	
017-110	2SC1815-Y	
017-135	2SD234-Y	or
017-140	2SD880-GR	
017-016	2SK30ATM-GR	FET
017-036	E-412	dual FET

Diode

018-018	1N4003	
018-059	1S1588	
018-082	W-02	rectifier bridge
018-092	RD-5.1EB	zener
018-015	SDT-1000	thermistor
019-022	GL-3AR1 LED	power.memory
019-020	GL-3AR2 LED	LFO,VCA

Although some equivalent ICs are interchangeable, however, due to characteristic difference, use the same IC when specified in the circuit diagram.

IC

020-095	MC1455	
020-051	MC14001	
020-040	MC14011	
020-083	MC14016	
020-076	MC14024	
020-093	MC14025	
020-075	MC14049	
020-090	MC14051	
020-091	MC14052	
020-177	MC14070	
020-178	MC14099	
020-084	TC4069UBP	only
020-031	μA723DC	
020-106	μA7805DC	
020-108	μA7815UC	
020-097	μPC4558C	
020-101	μPC741C	
020-181	μPC5101C-E	
020-032	μA726HC	
179-021	μPD8048C-12	
020-141	SN74LS175N	
020-054	LM311	
020-100	TL082	
020-039	DN819	

020-160	BA662A
020-096	BA662B
non	BA662S factory selected

For VCF, there are factory selected BA662s painted in particular colors according to the electrical characteristics.
When replacing,use the BA662 in the same color,and when ordering,denote color as well as BA662S.

048-046	Heat Sink No.46
055-003	Rechargeable Battery 4N-100AAS

HOLDER

064H55	H55
064-184	No.184 (Module, Module Cont. VCO-9 right)
064-185	No.185 (Module, Module Cont. VCO-9 left)
064-186	No.186 (Module, Module Cont. VCO-9-Mother Board)
064-187	No.187 (Power Switch)
064-203	No.203 (Bender Panel-Bender Board)
064-204	No.204 (Bender Panel-Bender Board)
064-205	No.205 (Bender Unit)
064-210	No.210 (Bender Panel-Bender Board)
064-219	No.219 (Music Rack-Panel)
064-226	No.226 (End Block)
064-227	No.227 (Side Panel)
064-231	No.231 (Control Board-Panel)
064-232	No.232 (Bender Panel-Keyboard)
064-233	No.233 (Battery)
064-239	No.239 (Mother Board-Chassis)
064-249	No.249 (Push Switch)
064-230	No.230 (Control Board-Panel)

CONNECTOR

010-177	PICD-9P-T1	Mother Board male
010-178	PICD-9S-TL1	Module, Module cont, VCO-9 female

Wafer Terminal pin

Erect			Right Angle	
010-182	5045-02A	2-pin	010-192	5046-02A
010-183	5045-03A	3-pin	010-193	5046-03A
010-184	5045-04A	4-pin	010-194	5046-04A
010-185	5045-05A	5-pin	010-195	5046-05A
010-186	5045-06A	6-pin	010-196	5046-06A
010-187	5045-07A	7-pin	010-197	5046-07A
010-188	5045-08A	8-pin		
010-189	5045-09A	9-pin	010-199	5046-09A
010-190	5045-10A	10-pin	010-200	5046-10A

COVER

065-065	No.65	065-190	No.190
065-066	No.66	065-232	No.232
065-143	No.143		